BECKER

Betriebsanleitung
Operating Instructions
Instructions de service
Istruzioni d'uso
Handleiding
Instrucciones para el manejo
Manual de instruções
Naudojimosi instrukcija
Kasutusjuhend
Lietošanas instrukcija
Driftsinstruks
Driftsinstruktioner
Käyttöohje
Driftsvejledning
Instrukcja obsługi

Kezelési útmutató
Návod k obsluze
Navodilo za uporabo
Návod na obsluhu
Upute za rad
Manual de operatii
Treoracha Oibriúcháin
Οδηγίες χρήσης
El Kitabi
Инструкции за експлоатация
Инструкция по эксплуатации
取扱説明書
사용설명서
使用说明书

VT 4.40

2006/42/EG

DIN EN ISO 14001:2005

DIN EN ISO 9001
001929 QM

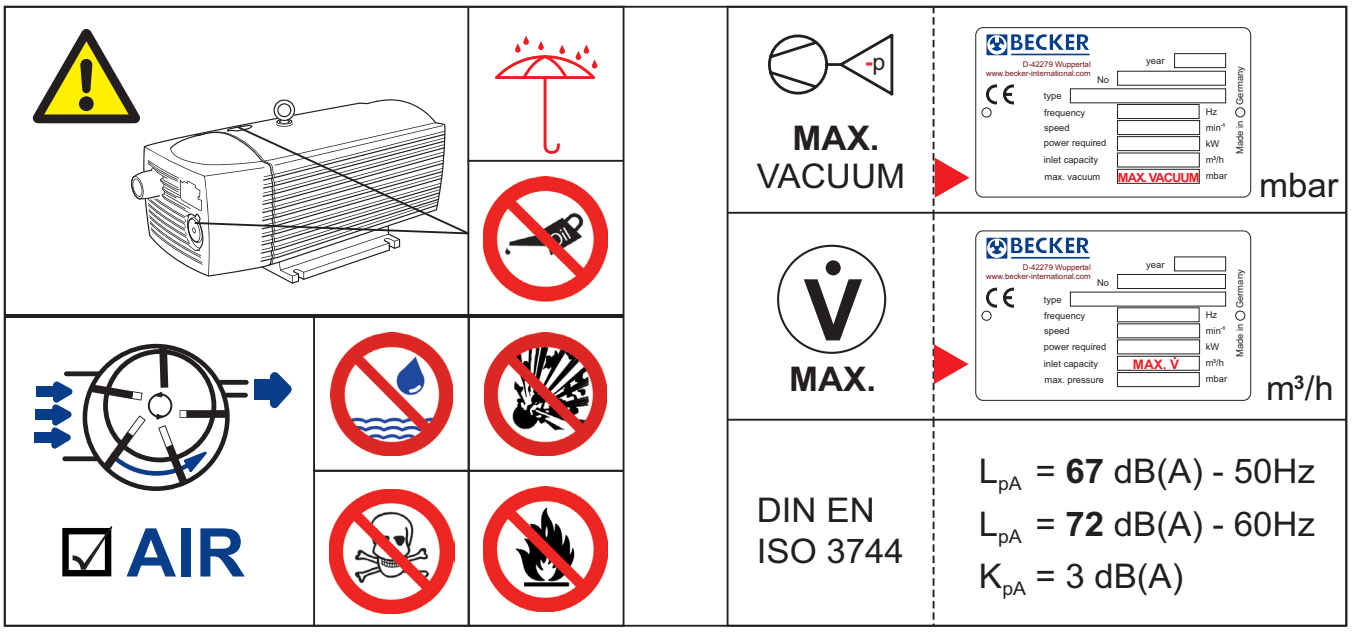

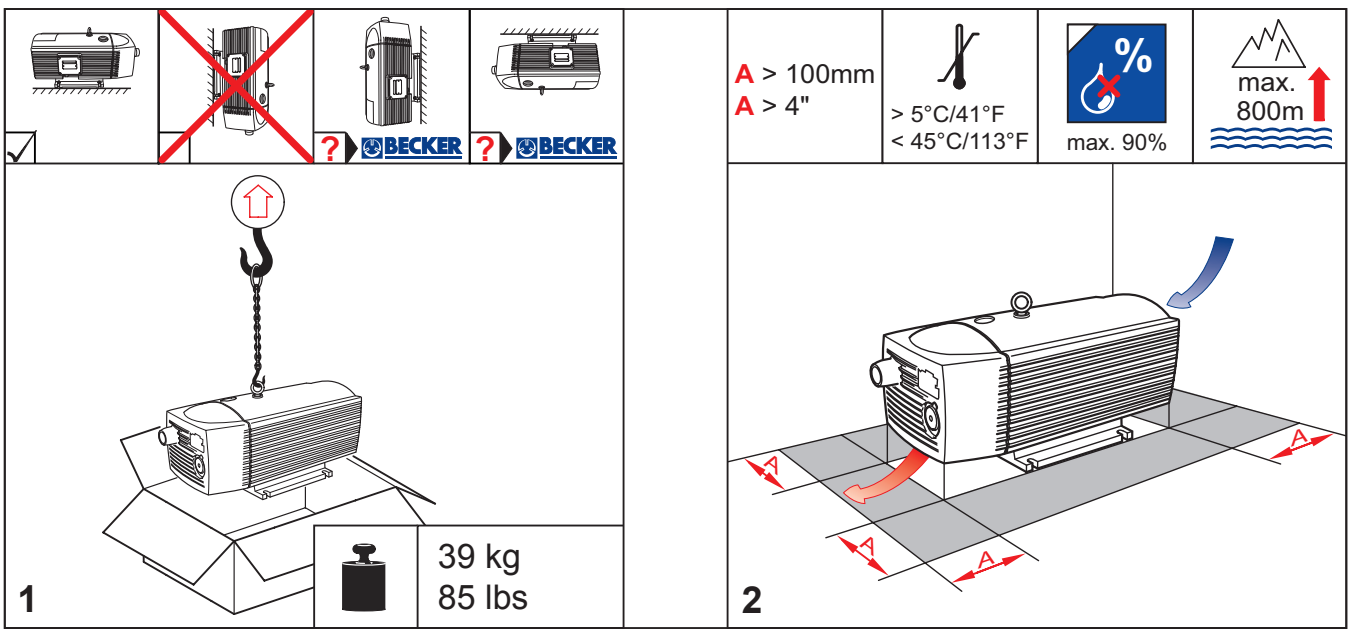

28100027602 01/14

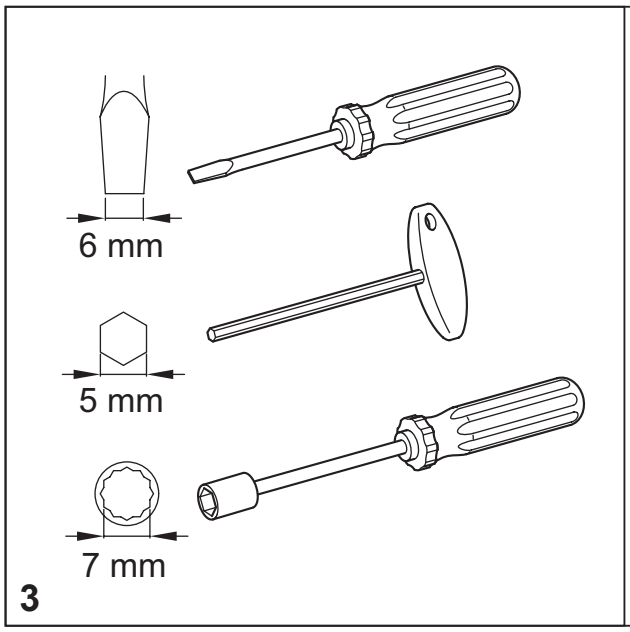
6 mm
5 mm
7 mm
3

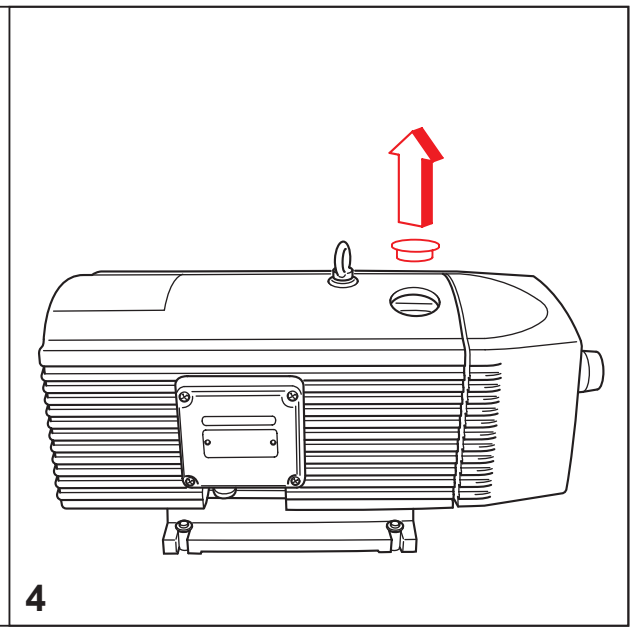
4

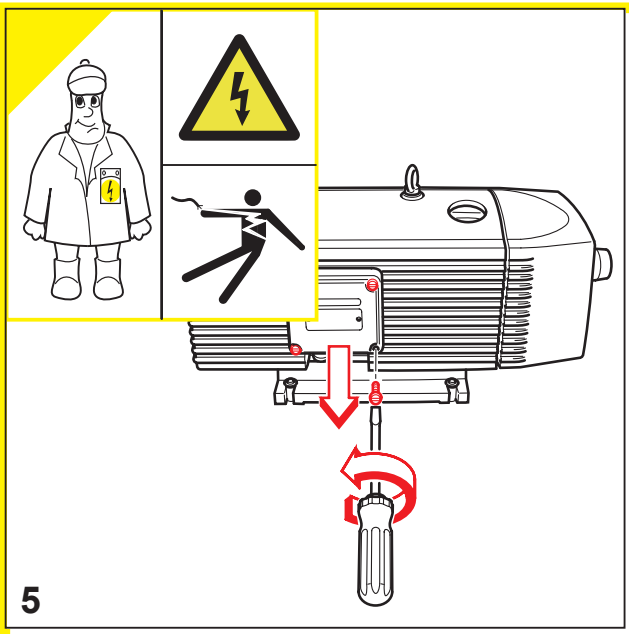
5

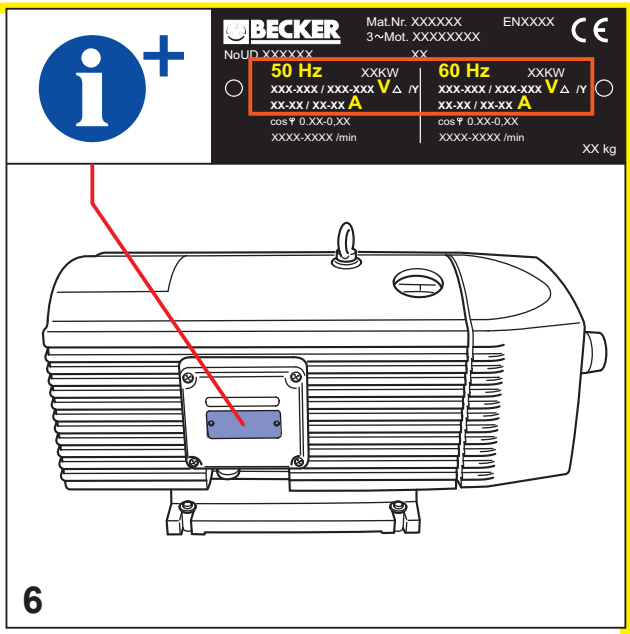
BECKER
Mat.Nr. XXXXXX
3~Mot. XXXXXXXX
ENXXXX
NoUD XXXXXX
XX
50 Hz
XXKW
XXX-XXX / XXX-XXX V Δ /Y
XX-XX / XX-XX A
cos φ 0.XX-0,XX
XXXX-XXXX /min
60 Hz
XXKW
XXX-XXX / XXX-XXX V Δ /Y
XX-XX / XX-XX A
cos φ 0.XX-0,XX
XXXX-XXXX /min
XX kg
6

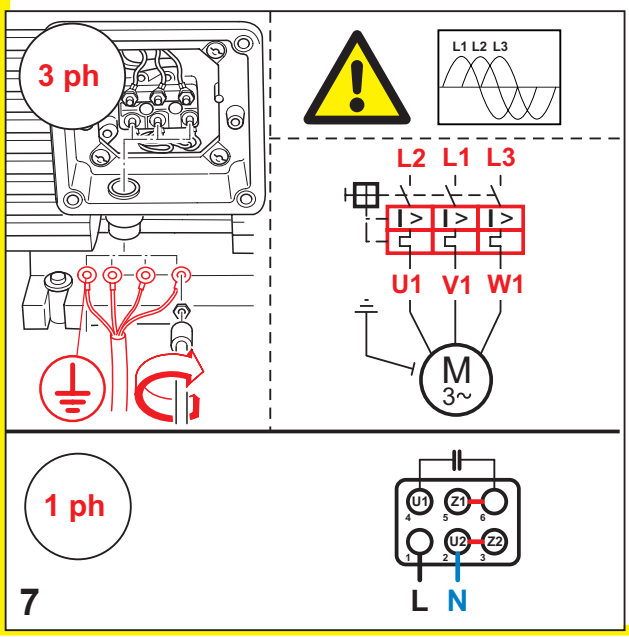
3 ph
L1 L2 L3
L2 L1 L3
I > I > I >
U1 V1 W1
M
3~
1 ph
U1 Z1 U2 Z2
L N
7

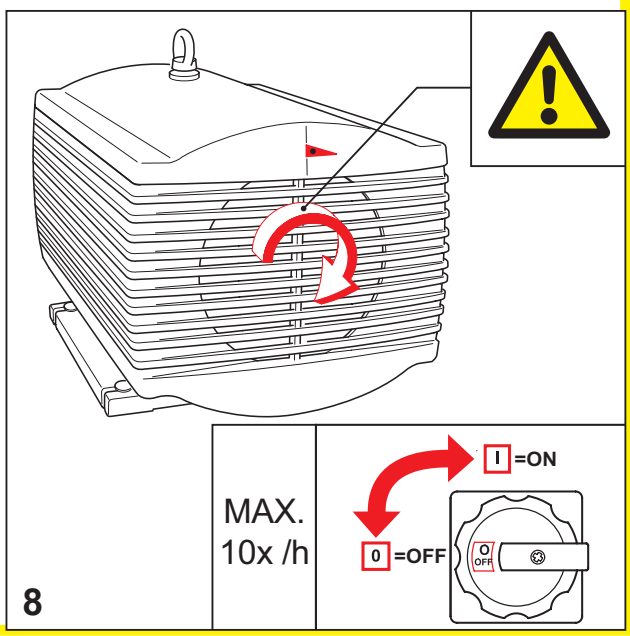
MAX.
10x /h
I =ON
0 =OFF
8

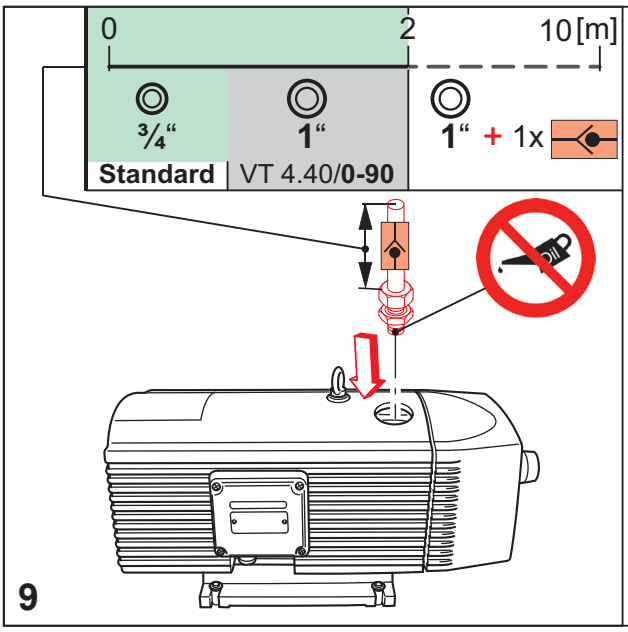
0
2
10 [m]
¾“
1“
1“ + 1x
Standard
VT 4.40/0-90
9

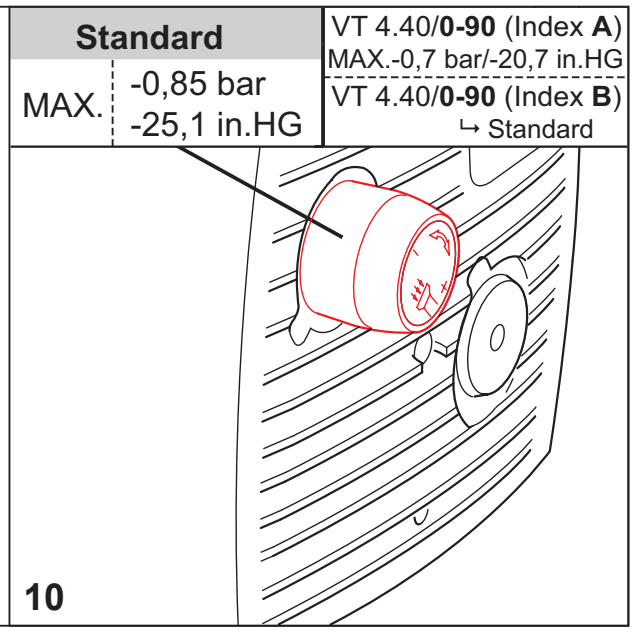
Standard
MAX.
-0,85 bar
-25,1 in.HG
VT 4.40/0-90 (Index A)
MAX.-0,7 bar/-20,7 in.HG
VT 4.40/0-90 (Index B)
↳ Standard
10

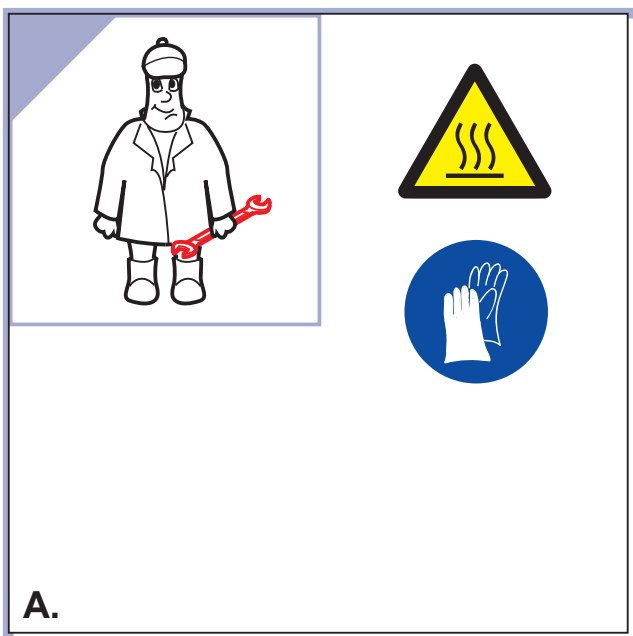
A.

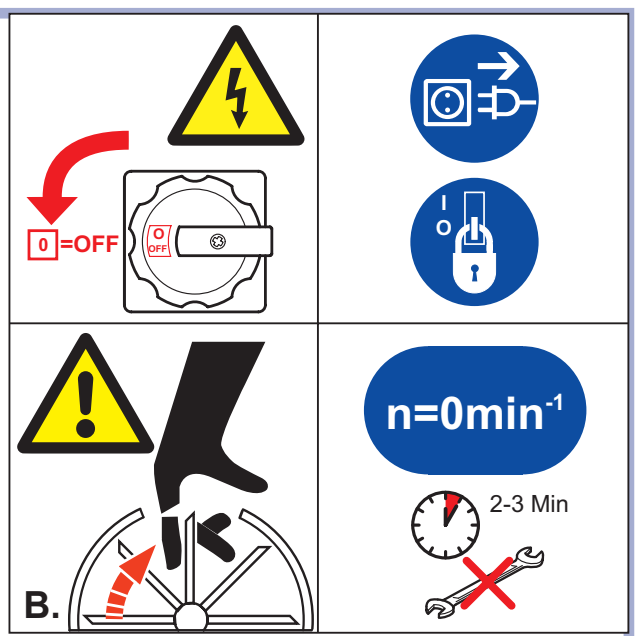
0 =OFF
OFF
n=0min-1
2-3 Min
B.

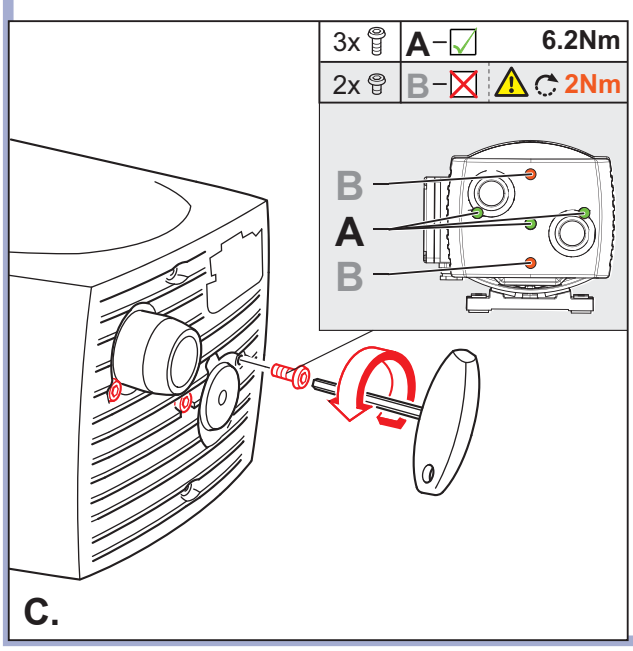
3x
A
6.2Nm
2x
B
2Nm
B
A
B
C.

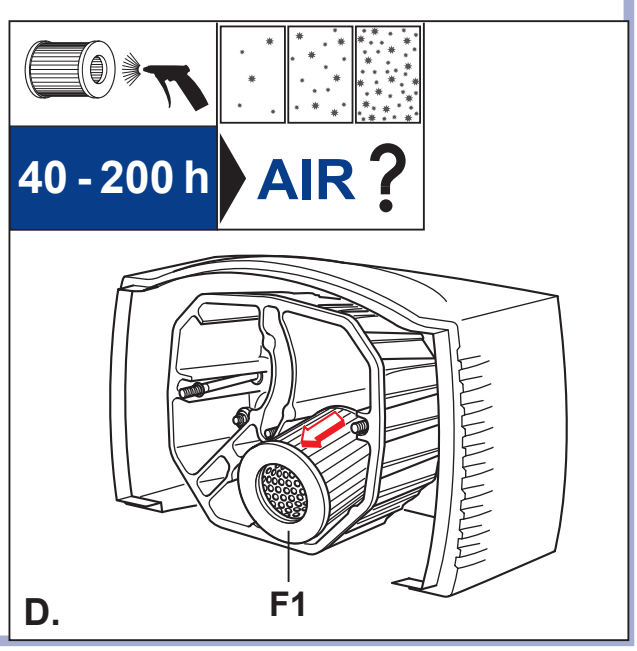
40 - 200 h
AIR ?
F1
D.

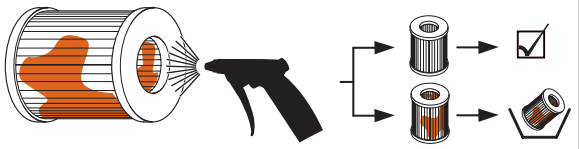

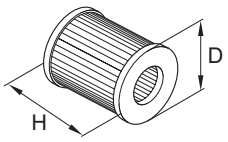

F1: D: 64 mm
H: 70 mm
No.: **90950500000**

EN149 - FF**P3**
42 CFR 84 - **N100**

E.

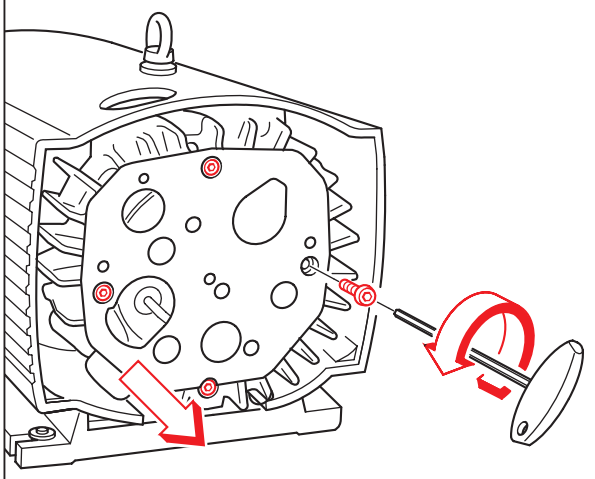

F.

3000 h

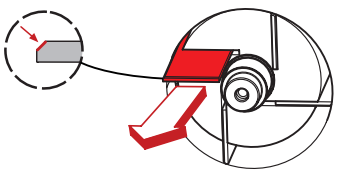

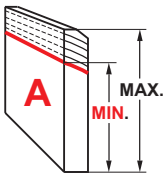

Standard	
A_{MIN} = 28mm	
VT 4.40/**0-90**	
A_{MIN} = 33mm	

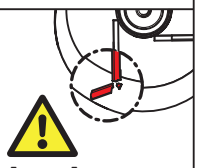

$A < A_{MIN}$

Standard → No. 90135200007 **(SET)**

VT 4.40/**0-90**
(Index **B**) → No. 90139700007 **(SET)**

G.

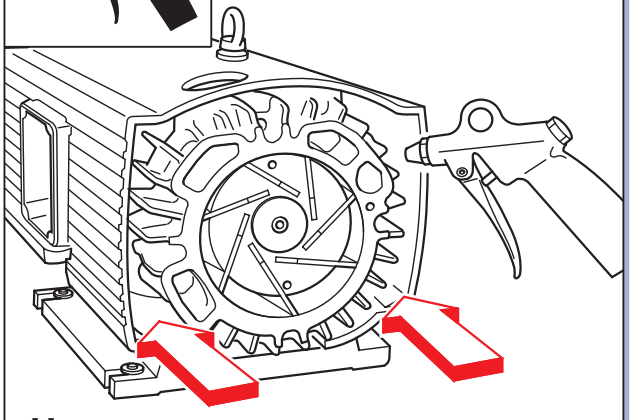

H.

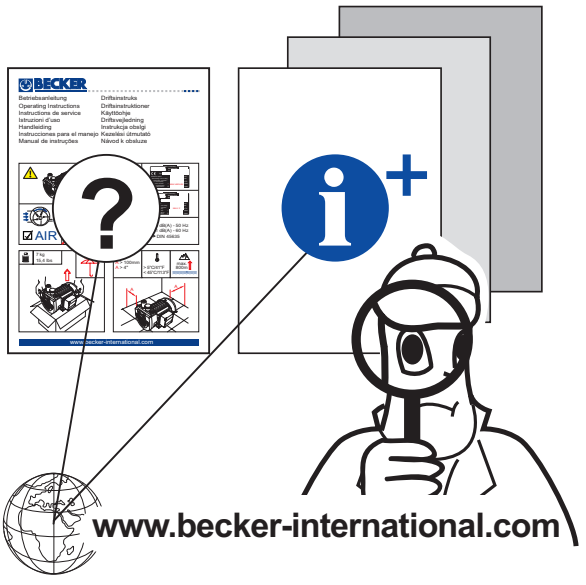

www.becker-international.com

BECKER

Gebr. Becker GmbH
Hölker Feld 29-31
D-42279 Wuppertal
info@becker-international.com