Ideal® vacuum

OUR PRODUCTS DEVELOP TOMORROW'S TECHNOLOGIES™

EXPLORAVAC™

USER MANUAL

EXV-08092023- V 1.2.6.1

WARRANTY

Ideal Vacuum warrants to the original purchaser, this product to be free from defects in workmanship and materials for a period of one year from the original delivery date. The liability of Ideal Vacuum, under this warranty, is limited to servicing, adjusting, repairing or replacing any unit or component part which, at Ideal Vacuum's sole discretion, is determined to have failed during normal, intended use. This warranty does not cover improper installation, process related damage, product use in any way other than defined in this manual, or any misuse, abuse, negligence, accident, or customer modification to the product.

Prior to returning any product, we require that you contact us by phone or email to determine if the issue can be resolved quickly. A technical support representative will work with you to resolve the problem. If the issue cannot be resolved in that manner, we will issue an RMA number and provide product return instructions.

THIS WARRANTY IS IN LIEU OF ALL OTHER WARRANTIES, EXPRESSED OR IMPLIED, INCLUDING THE IMPLIED WARRANTY OF MERCHANTABILITY AND THE IMPLIED WARRANTY OF FITNESS FOR USE OR FITNESS FOR A PARTICULAR PURPOSE. IDEAL VACUUM SHALL NOT BE LIABLE UNDER ANY CIRCUMSTANCES FOR INDIRECT, SPECIAL, CONSEQUENTIAL OR INCIDENTAL DAMAGES ARISING OUT OF THE USE OF THE PRODUCT. THE TOTAL LIABILITY OF IDEAL VACUUM SHALL NOT EXCEED THE PURCHASE PRICE OF THE PRODUCT UNDER ANY CIRCUMSTANCES.

CUSTOMER SERVICE AND SUPPORT

If you have any questions concerning the installation or operation of this equipment, or if you need warranty or repair service, please contact us. Customer Service and Technical Support is available weekdays, from 8am-5pm, Mountain Time.

Phone: (505) 872-0037

Fax: (505) 872-9001

Email: info@idealvac.com
techsupport@idealvac.com

Web: idealvac.com

INTELLECTUAL PROPERTY

At Ideal Vacuum we constantly strive to innovate and improve on existing products. Therefore, specifications and information are subject to change without notice. The Ideal Vacuum Logo is a registered trademark, ExploraVAC, AutoExplor, HALO View, CommandValve, Super-Seal, Delta-P, and the slogan "Our Products Develop Tomorrow's Technologies" are trademarks of Ideal Vacuum Products, LLC. Micro-Ion and Convectron are registered trademarks of MKS Instruments. HiPace is a registered trademark of Pfeiffer Vacuum GmbH. Unistat is a registered trademark of Peter Huber Kältemaschinenbau AG. Windows is a registered trademark of Microsoft Corporation. Swagelok is a registered trademark of The Swagelok Company. Reference to products, trademarks, and registered trademarks owned by other manufacturers is made strictly for informative purposes and are the sole properties of their respective owners.

TABLE OF CONTENTS

LIST OF FIGURES

LIST OF TABLES

SAFETY

IMPORTANT SAFETY INFORMATION

Thank you for purchasing this equipment from Ideal Vacuum Products. We want you to operate it safely.

- **Read this manual and all associated equipment manuals before installing or operating this equipment. Failure to follow the warnings and instructions may result in serious injury or equipment damage.**
- **Keep this manual in a safe location for future reference.**
- **This equipment should only be installed and operated by trained, qualified personnel, wearing appropriate protective equipment.**
- **Follow all codes that regulate the installation and operation of this equipment.**

WARNING SYMBOLS AND DEFINITIONS

This is the universal safety alert symbol. It is used to alert you to potential personal injury hazards. Obey all safety messages that follow this symbol to avoid possible injury or death.

DANGER	**Indicates an imminently hazardous situation that, if not avoided, will result in death or severe injury.**
WARNING	**Indicates an imminently hazardous situation that, if not avoided, could result in death or severe injury.**
CAUTION	**Indicates a potentially hazardous situation that, if not avoided, could result in moderate or minor injury. It may also be used to alert against unsafe practices.**
NOTICE	**Indicates a potentially hazardous situation that, if not avoided, could result in equipment or property damage.**
NOTE	**Indicates helpful tips and recommendations, as well as information for efficient, trouble-free operation.**

Internationally recognized safety symbols may be used with safety warnings to specify the type of hazard or a safety protocol to follow. For example:

Indicates an electric shock hazard

Indicates safety glasses are required

SAFETY FOR VIEWING WINDOWS AND DOORS

DANGER

Implosion/explosion hazard. Failure to follow ALL instructions and safety precautions can result in serious injury or death.

CAUTION

Always wear protective equipment, including safety glasses and gloves. Exercise care when working with any vacuum component.

All viewing windows, doors, or ports are inherently fragile. Exercise great care when handling, mounting and when using a chamber with a viewing window. Below are specific warnings and special precautions needed for safely installing and using a viewing window.

VISUAL INSPECTION

Visually inspect the window upon receipt and check regularly for scratches or any irregularity. Even small scratches can cause a weak spot in the window causing failure. Keep hard objects away from the window. Use only a soft cloth or lens tissue for cleaning.

MOUNTING AND ASSEMBLY

Carefully follow all mounting and reassembly instructions if you are replacing or servicing the window pane. Strictly adhere to the bolt torque specifications and tightening order pattern. Over-tightening of bolts DOES NOT produce a more leak-proof seal. Overtightening, or failure to properly reassemble a viewing window assembly could cause internal strain buildup in the window material resulting in failure.

PRESSURE

NEVER subject a viewing window equipped chamber to positive internal pressure. The viewing window is designed and rated for vacuum ONLY. Chamber pressures in excess of ambient atmosphere could cause the viewing window assembly to fail catastrophically.

TEMPERATURE CHANGES AND THERMAL SHOCK

The fragile nature of the window makes it susceptible to thermal shock. Rapid temperature changes under vacuum, hot or cold, can cause failure. Bakeout or cooling is permissible within the temperature rating of the Viton® O-ring seals. Keep chamber temperature change rates to <10° C/min (<18° F/min).

If directing a laser beam through the window, make sure the laser's wavelength can be reasonably transmitted through the window's material. Directing a laser through the window of a wavelength the window material absorbs, or focusing a laser of any wavelength within the window medium, will cause a steep thermal gradient extending outward from the point of incidence. This could result in localized weakening or fracturing of the window.

1. OVERVIEW

1.1 DESCRIPTION

The ExploraVAC™ system is an innovative, highly configurable, fully integrated, self-contained, environmental vacuum chamber simulation system. This is a turnkey test instrument, and is designed to fit through a standard 36” x 80” doorway. The ExploraVAC system is designed for vacuum only. It should not be used for pressures above ambient atmosphere.

Numerous options allow the user to individualize the ExploraVAC system for their unique process requirements, whether for prototype device testing, material synthesis and conditioning, pressure and temperature control experiments, or other environmental simulation.

All ExploraVAC standard and Cube systems use a welded stainless steel or modular aluminum cubic vacuum chamber with optional viewing window in the door. Available cubic chamber sizes range from 9” to 24”. The chamber is permanently affixed atop an attractive, sturdy, and mobile equipment cabinet with a thick aluminum top deck. In addition to having all necessary ports for plumbing the system, the right side of the chamber has an ISO 200 port that can be blanked, used as an ISO 200 port, or a custom plate can be ordered with multiple feedthrough ports (i.e., KF, CF, ISO flanges) for sensors or other specialty equipment.

The enlosed cabinet houses an Edwards dry scroll nXDSi or multi roots nXRi roughing pump coupled with our Delta-P™ system protection valve, pneumatic valves, an onboard compressor, and necessary plumbing. Vented side and back panels are easily removed for system service.

Depending on the configuration, the cabinet might include our CommandValve™ butterfly throttle valves for accurate pressure control. Various platen heating and cooling options from -170°C to 375°C are available. Accurate temperature control can be maintained to within ± 0.3°C. Chamber wall heating is an option on modular aluminum Cube chambers. A purge gas option allows pressurized gas, such as high purity, oxygen, or other water-free gas, to be injected into the chamber. The high vacuum turbo pump option (Pfeiffer HiPace 80, 300 or 450) adds a dual convection and ion gauge controller, and additional gauges, valves and piping.

The ExploraVAC cabinet has a conveniently angled front panel control surface with colored LED pushbuttons for running the system. PID controllers and gauges are installed as required for the selected options. System functions, including pump and valve sequencing for efficient pump down cycles, and safety interlocks for preventing equipment damage, are managed by a PLC. The front accessible, built-in, NEMA style enclosure, houses the electronics needed for system operation.

The back of the cabinet holds a bulkhead feedthrough panel for chamber venting, pump exhaust and the purge gas option. It also holds a digital feedthrough panel with a DB9 connector for running the system from a PC with our optional ***AutoExplor™*** software, and a DB-15 I/O connector for controlling user supplied external equipment. The user can choose the basic version of AutoExplor for simple, manual system operation and data streaming. The annually renewable premium version adds the ability to create, run, save and repeat complex system recipes, and can log, store, and retrieve real-time system generated data. The premium version also includes AutoExplor IP Client, which gives the software the ability to be used as a host that can manage multiple external network clients, and AutoExplor API (application programming interface), which allows an advanced user to integrate an ExploraVac instrument into their existing software test suite without using AutoExplor’s software interface. AutoExplor can be upgraded at any time.

2. INSTALLATION

2.1 EQUIPMENT LOCATION

DANGER

Do not use in damp, wet, or hazardous locations where flammable, corrosive, or toxic gases or vapors are present.

WARNING

If the process uses non-inert gases or produces noxious fumes, pump exhaust and chamber vents must be safely routed and evacuated away from personnel work areas.

The ExploraVAC system is a commercial/industrial product and is not intended for residential use The instrument requires indoor installation in a relatively clean environment on a flat, sturdy floor. The machine's footprint is 32.4 in. wide (822 mm) by 36.3 in. (921 mm) deep. For systems with a Huber external heating and cooling system, refer to the printed datasheet in the manual or the USB file for the footprint of your individual build.

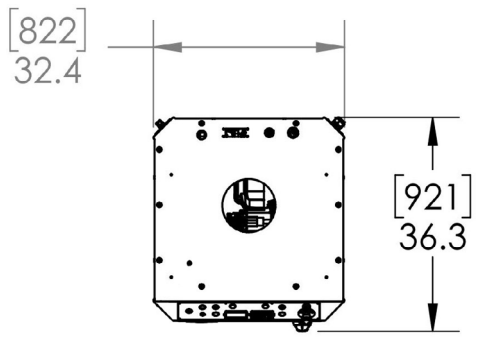

Figure 1 - System footprint

Side	Minimum Clearances
Front	3 ft. (1m)
Sides	1 ft. (0.3m)
Back	1 ft. (0.3m)
Top	1 ft. (0.3m)

Table 1 - Minimum required clearances

The system will weigh between approximately 600 and 1300 lb. (≅ 275 - 575 kg) depending on system configuration. Make sure the floor can support the weight. A concrete floor is preferred to minimize noise and vibration.

A minimum of approximately 30 ft^2 (≅ $3m^2$) is required to allow proper ingress to the electronics enclosure, for ventilation and equipment cooling. It is desirable to allow extra space on the sides and back of the machine to allow for easier periodic maintenance and more convenient service.

2.2 WHAT IS INCLUDED

- The ExploraVAC system
- Hardware pack with four (4) vibration dampening levelling feet, 4mm & 10mm hex wrenches
- Hardware pack for mounting turbo pump (high vacuum systems only)
- Printed manual, system specific data and performance sheets
- Electrical schematics and electronics Bill of Materials (inside control panel door)
- USB drive with digital copies of all printed materials and all sub-system manuals.
- Heat transfer fluid, a filling tube, and funnel (platen chiller equipped systems only)
- External Huber heating/cooling system (when applicable)

2.3 UNCRATE AND POSITION

NOTE

Upon receipt, check for any obvious shipping damage. Immediately contact Ideal Vacuum at 505-872-0037 if you suspect any damage.

1. The system is shipped fully assembled in a palletized crate, with the exception of high vacuum system configurations. If the system includes a turbo pump, it may require mounting after the machine is put in place (See Sec. 2.5, p. 10).
2. Unscrew and remove the crate top and sides to expose the instrument. Keep the crate for possible future use.
3. Remove both side panels. The quarter-turn panel fasteners use the included 4mm hex wrench.
4. Unscrew the four (4) 3/8” lag bolts which secure the machine to the pallet. Use a 9/16” wrench or impact driver. The bolts are located inside the bottom rail, close to the corners.
5. Replace the side panels.
6. Remove the instrument from the shipping pallet.

   Carefully lift the instrument off the pallet from below. Use a forklift from the side.

⚠ CAUTION

The ExploraVAC system is top heavy. Make sure forklift forks extend past the opposite side of the instrument before lifting from below. DO NOT LIFT FROM ABOVE.

Lower the instrument to the floor and roll it to its predetermined location. The instrument will fit through a standard doorway (when turbo pump is not mounted).

⚠ CAUTION

Seismic restraints may be required if the system is installed in a seismically active area. Consult with a structural engineer to determine code requirements and if restraint hardware is needed.

2.4 INSTALL LEVELLING FEET (OPTIONAL)

To change the casters to levelling feet:

1. Lift the machine from the front or back with a pallet jack.
2. Remove the two side covers using the 4mm hex wrench.
3. Remove the casters using a wrench or ratchet with 3/4” or 19mm deep socket.
4. Replace with the levelling feet. Use two (2) 3/4” or 19mm wrenches to tighten.
5. Replace the side panels.
6. Gently lower the pallet jack.
7. Level the system side-to-side and front-to-back.

2.5 MOUNT THE TURBO PUMP

On high vacuum equipped ExploraVAC systems with larger chambers, the turbo pump and foreline may require mounting on the chamber. The turbo's cooling fan is already connected.

Get the turbo pump, the "L" shaped stainless steel foreline and the turbo hardware pack.

1. Place the ISO 63 or ISO 100 centering ring on the gate valve (**1**), then place the turbo pump on top (**2**).
2. Secure the turbo (**2**) with with four (ISO 63, HiPace 80) or eight (ISO 100, HiPace 300) single sided claw clamps (**3**).

   Use a 1/2" wrench. Tighten in a star pattern. Torque to 10 ft-lb. (max).

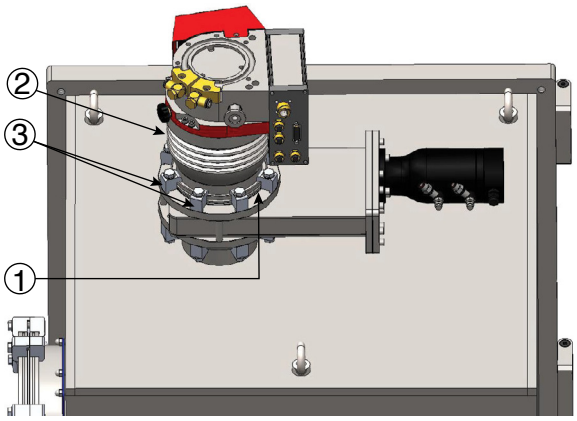

Figure 2 - Mount turbo

3. Place a KF-16 centering ring in the lower KF flange (**5**).
4. Place the longer end of the foreline tube (**4**) onto the lower centering ring and flange (**5**).
5. Secure with a hinged clamp (**5**).
6. Place the other centering ring in the KF flange on the turbo and secure the foreline tube onto the turbo with the remaining hinged clamp (**6**).

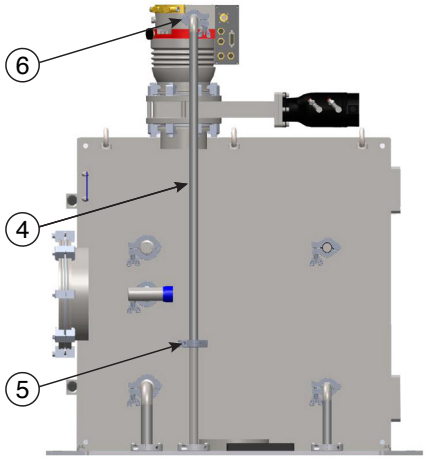

Figure 3 - Connect foreline

7. Make the electrical connections.

   For HiPace 80 equipped systems, the DC power, and RS485 connections both attach through the 15 pin D-Sub on the TC-110 electronic unit (**7**). The fan connects to the side of the DB15 plug into the Accessory (A) connector.

   For HiPace 300 equipped systems, the gray DC power cable connects to the 3 pin connector (**8**). The black RS485 cable attaches to the next lower 4 conductor connector (**9**). The fan plugs into the Accessory (A) connector (**10**).

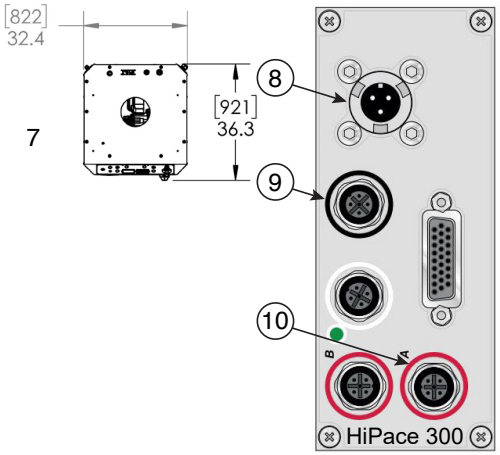

Figure 4 - Connect turbo wiring

2.6 SUPPLY POWER CONNECTION

WARNING

Electrical hookup of this equipment must be performed by a licensed, qualified electrician. All wiring must be completed in accordance with national and local codes.

ExploraVAC systems require 208-240 VAC, single phase with neutral (Black, Red (hot), White (neutral), Green (ground) and depending on configuration, can require up to 50 amps. A nameplate above the main power input specifies the system's voltage and current requirements (Sec. 3.3, p. 14). The input power cable gauge must be rated for the maximum current of the instrument.

NOTICE

Verify the supply voltage. Energizing the system at a higher voltage than the system rating will cause damage and void the warranty.

If power is obtained from two legs of a three phase supply, both hot wires MUST be at the same voltage. Do not use the "Wild" leg of a 240V, 3 phase Delta configured system as one of the hot legs. For 208V Wye three phase systems (all three legs are the same voltage), use any two legs.

The ExploraVAC system should always be wired to its own supply circuit, and through an appropriately sized service disconnect, fusible or non-fusible, for system lockout and maintenance. An appropriate input cable (armored or SJ type) and strain connector are customer supplied.

USE COPPER CONDUCTORS ONLY

Remove the right side Power Input Panel with a Phillips #2 screwdriver (6 screws).

1. Once the 4 internal input wires are exposed, remove the small round splice cap on the power input side of each tap/splice.
2. The panel has holes for either 1-1/2" or 1" conduit connectors. Prepare the panel with the appropriate connector or strain relief (kellums).
3. Strip 3/4" from each of the 4 input wires.
4. Pass the input power cable through the panel.
5. Using a 1/8" hex wrench, secure each of the input wires. Use Table 6 below for proper tightening torque of the tap/splice bolts.
6. Replace the cap on each tap/splice.
7. Carefully push the wires into the stand cavity and screw down the Power Input Panel.
8. Connect the power input cable to the service disconnect.

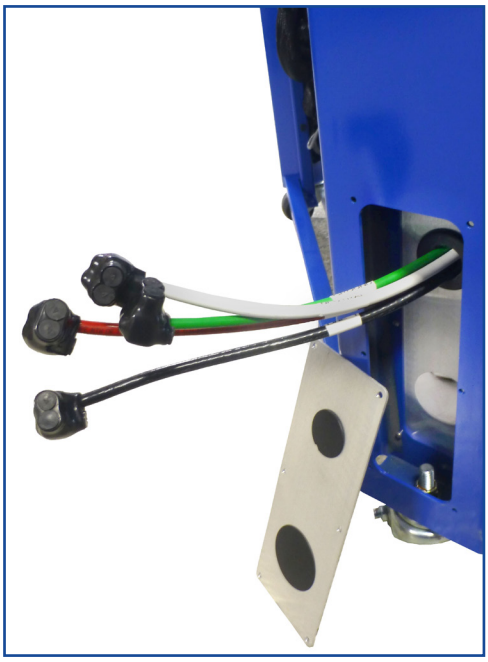

Figure 5 - Input tap/splices

Wire Size	2	4	6	8	10
Torque (lb-in.)	45	45	45	45	40

Table 2 - Tightening torque for tap/splices

2.7 FILL FLUID RESERVOIR

WARNING

Use care when filling chiller. Wipe spilled fluid off surfaces immediately. Heat transfer fluid for -70°C recirculating chiller systems is flammable. No open flames, heat sources, or sparks when filling.

ExploraVAC systems with a cooling platen are shipped dry. The heat transfer fluid reservoir must be filled before use. Fluid is included with the system. TCube solid state systems require 1 liter of fluid (50/50 antifreeze). Recirculating -70°C chiller systems, require approximately 1.7 gallons of fluid (denatured ethanol). A filling tube and funnel, supplied with the machine, is used to fill the fluid reservoir. Remove the left side panel with 4mm or 5/16” hex wrench.

Fill the TCube solid state system:

1. Open the fill port and insert the funnel.
2. Slowly pour approximately 1 liter of fluid into the tank until the fluid reaches the upper fill line on the tank. Do not overfill.
3. Replace the cap. Replace the ExploraVAC panel.
4. The system is ready for use.

Fill the -70°C recirculating chiller system:

1. Remove the cap on the KF16 fill port and insert the funnel into the tank.
2. Switch the ExploraVAC on with the POWER switch on the console (or press the POWER icon in AutoExplor). If you have AutoExplor, open the Coolant Pump device card on the home page.
3. Slowly pour approximately 1.7 gallons of fluid into the reservoir.
4. Fill the tank until the alarm buzzer gives a long beep. In AutoExplor, the Coolant Pump device High Level Switch will change from “0” to “1”. Do not overfill.
5. Replace the fill port cap and the ExploraVAC cabinet panel. The cap must be installed to keep humidity in the air from freezing in the tank when the system is running.
6. The system is ready for use.

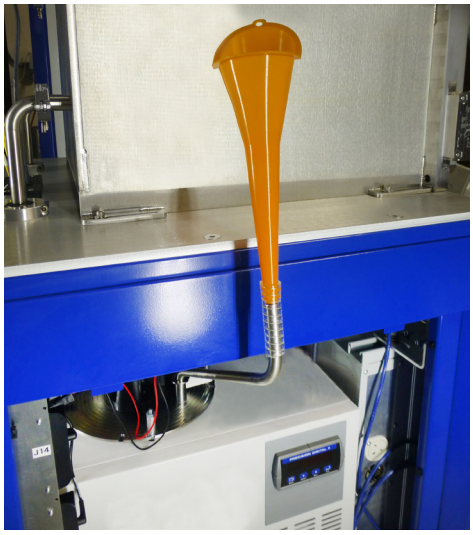

Figure 6 - Thermal fluid fill port

Drain the -70°C recirculating chiller system:

The coolant drain tube is on the bottom left of the chiller unit. Place a bucket of at least 2 gallon capacity under the tube. Hold the hose while twisting out the drain plug to keep the hose from disconnecting internally. Make sure the PLATEN HEAT/COOL switch has been off for at least 5 minutes and the coolant recirculating pump is off. This allows any fluid in the platen to drain back into the reservoir. If any fluid remains in the platen, it can cause the fill level to be exceeded, or the fluid to overflow when refilled.

Fill and Drain the External Huber Unistat 405, 705, or 815 System:

Follow the manufacturer’s instructions for filling and draining the system for externally closed applications (Chapter 4.3, Huber Unistat Operation Manual).

3. SYSTEM INFORMATION

3.1 TECHNICAL SPECIFICATIONS

This manual contains general system information and descriptions of the various available system specific options.

Technical specifications, equipment options, and performance test data specific to your built-to-order ExploraVAC system are provided in printed and/or digital formats.

The following three sections illustrate the major ExploraVAC system components. Depending on the options selected for your system, some illustrated components may not be installed.

3.2 ENCLOSURE COMPONENTS

The NEMA style enclosure contains all the necessary electronics and connections for the system. Figure 7 below shows all the major electronic components in any system. Your system configuration determines which components are included.

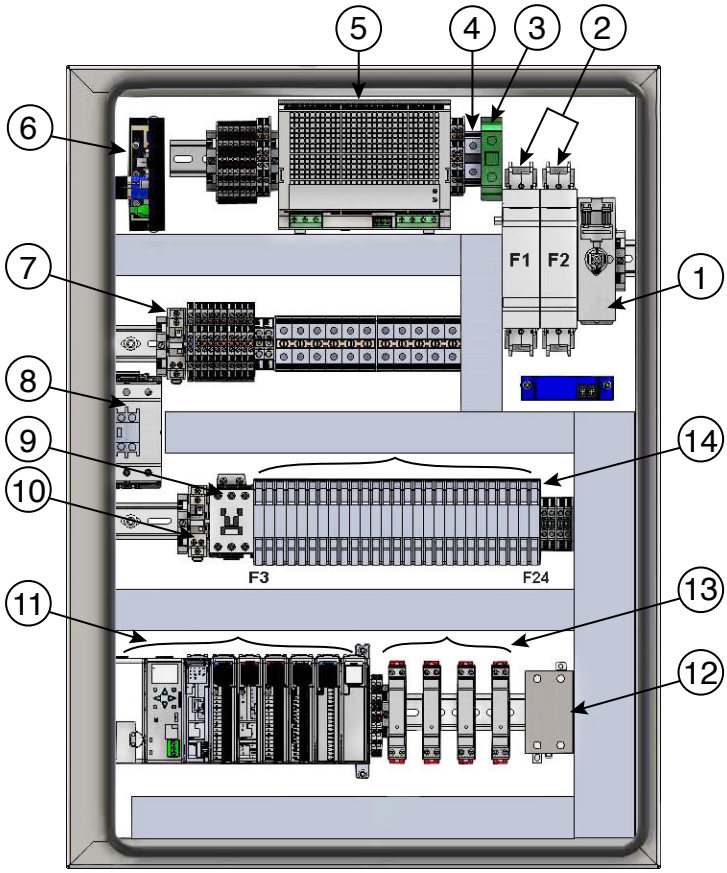

Figure 7 - Main electronic components

Item	Description
1	Main Power Switch/Disconnect
2	Fused “Hot” Input Power Terminals
3	Input Ground Terminal Block
4	Input Neutral Terminal Block
5	24 VDC Power Supply
6	Platen Chiller Pump Regulator
7	Platen Circulating Pump Relay
8	Main Power Relay
9	Platen Chiller Power Relay
10	Air Compressor Relay
11	Programmable Logic Control (PLC)
12	Chamber Wall Heating Relay (ExploraVAC MAX and Cube systems only)
13	Platen Heater Relays (4)
14	Fuse Block for all Subsystems

Table 3 - Electric component descriptions

3.3 EXTERNAL COMPONENTS

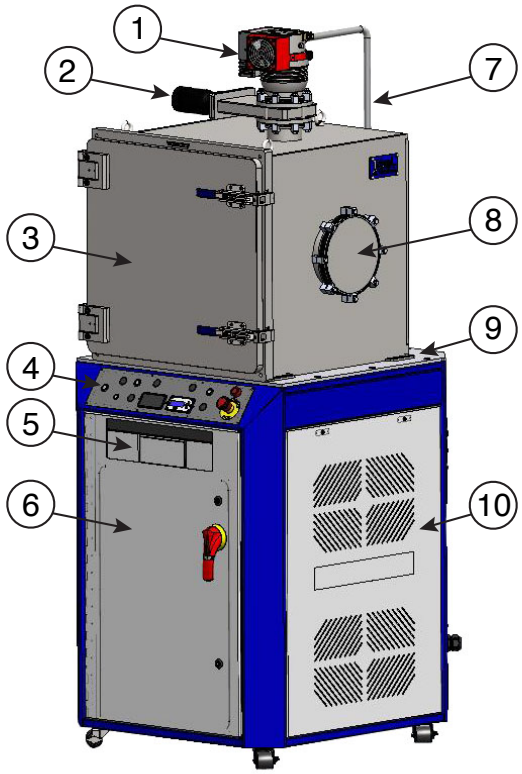

Figure 8 - Front components

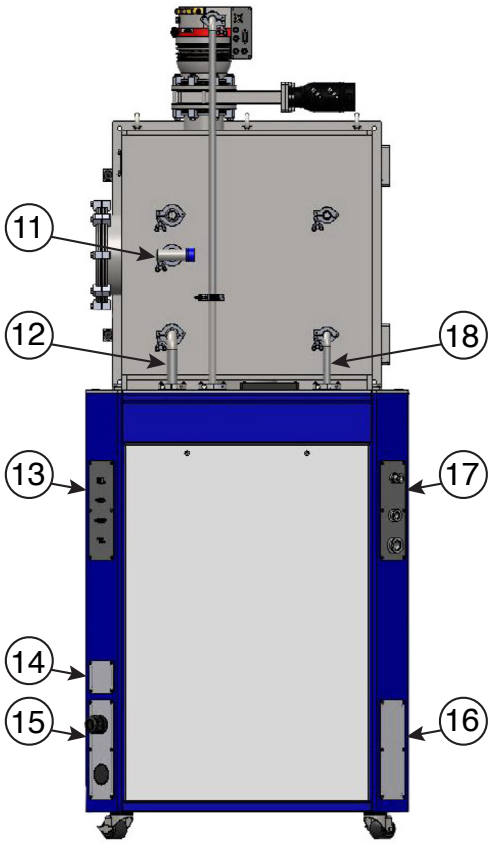

Figure 9 - Rear components

Item	Description
1	Turbo Pump (High Vac Option)
2	Pneumatic Gate Valve (High Vac Option)
3	Vacuum Chamber w/Hinged Door
4	Control Panel
5	3U Rack Mount for Pressure Gauges
6	NEMA Style Enclosure
7	Foreline (High Vac Option)
8	ISO 200 Port for User Feedthroughs
9	Aluminum Deck Plate
10	Side Panel, Vented, Quick Access
11	Chamber Pressure Convectron Gauge
12	Roughing Line
13	Digital Feedthrough Panel
14	Electrical Nameplate
15	Power Cable Input Panel
16	Configurable Panel
17	Exhaust, Vent, and Purge Gas Panel
18	Vent Line

Table 4 - Exterior component descriptions

3.4 INTERNAL COMPONENTS

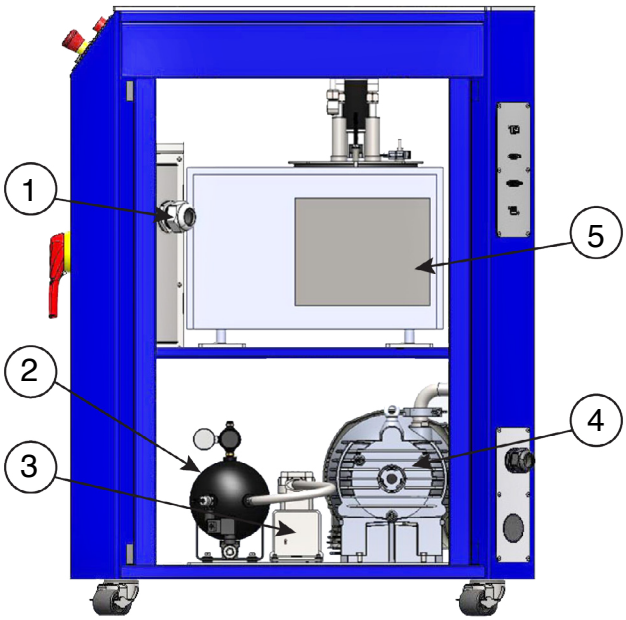

Figure 10 - Side view, roughing w/chiller

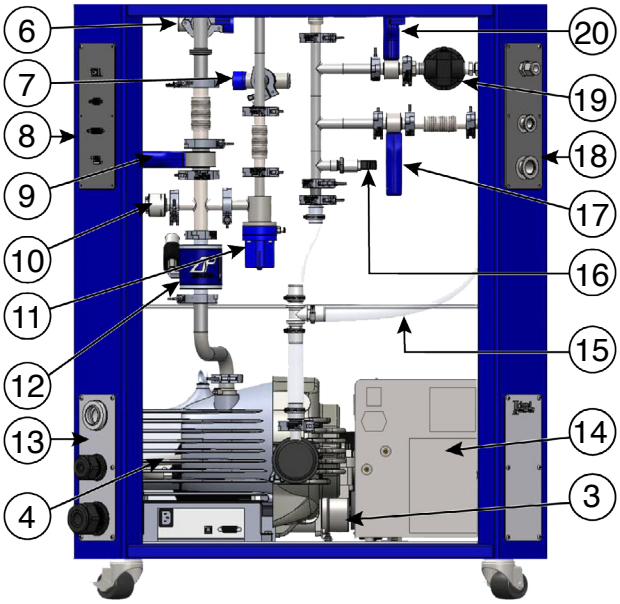

Figure 11 - Back view, high vac w/ smart valves and purge option

Item	Description
1	Power Cable Pass-Through
2	Air Reservoir (Tank for Compressor)
3	Air Compressor for Pneumatic Valves
4	nXDSi or nXRi Dry Roughing Pump
5	Platen Refrigerated Chiller (-70°C)
6	Chamber Pressure Convectron Gauge
7	Foreline Pressure Convectron Gauge
8	Digital Feedthrough Panel
9	Roughing (Smart) Valve
10	Roughing Line Peizo Gauge
11	Foreline (Pneumatic) Valve
12	Delta-P System Protection Valve
13	Power Cable Inlet Panel
14	Platen Solid State Chiller (-5°C)
15	Roughing Pump Exhaust Line
16	Manifold Over-Pressure Sensor
17	Chamber (Smart) Vent Valve
18	Exhaust, Vent and Purge Gas Panel
19	Purge Gas Manifold Regulator
20	Purge Gas (Smart) Valve

Table 5 - Interior component descriptions

3.5 BLOCK DIAGRAM

Figure 12 (below) shows the major system components in schematic form. Refer to Table 6 for a description of each component.

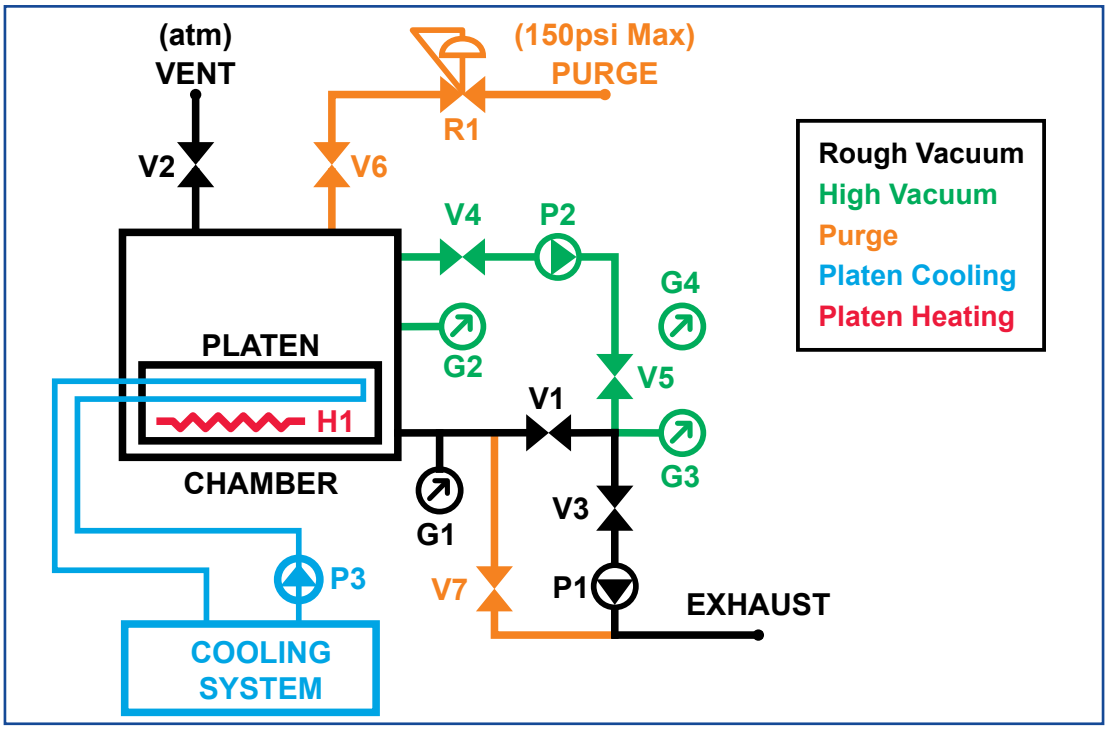

Figure 12 - System block diagram

Item	Description
V1	Roughing/pressure control valve
V2	Vent/pressure control valve
V3	Delta-P system protection valve
V4	Gate Valve
V5	Turbo rough valve
V6	Purge/pressure control valve
V7	Pressure relief valve (5psi break pressure)
P1	Edwards nXDSi or nXRi dry roughing pump
P2	Pfeiffer HiPace 80, 300, or 450 Turbo pump
P3	Platen coolant pump
G1	Chamber rough pressure convectron gauge
G2	Chamber micro ion gauge
G3	Roughing line piezo gauge
G4	Turbo roughing line convectron guage
R1	Purge line drop down regulator
H1	Platen heater

Table 6 - ExploraVAC systems block diagram

3.6 CONTROL PANEL

The system is manually operated by the illuminated, safety interlocked, push button switches on the control panel (Figure 13). These panel switches, setpoint controllers, and pressure gauges display current system conditions. Depending on the system function the user requests, the PLC will sequence valves and pumps to attain the requested state. The system configuration determines which buttons, gauges and setpoint controls are present.

See Chap. 4, p. 23 for detailed information about switch and controller operations.

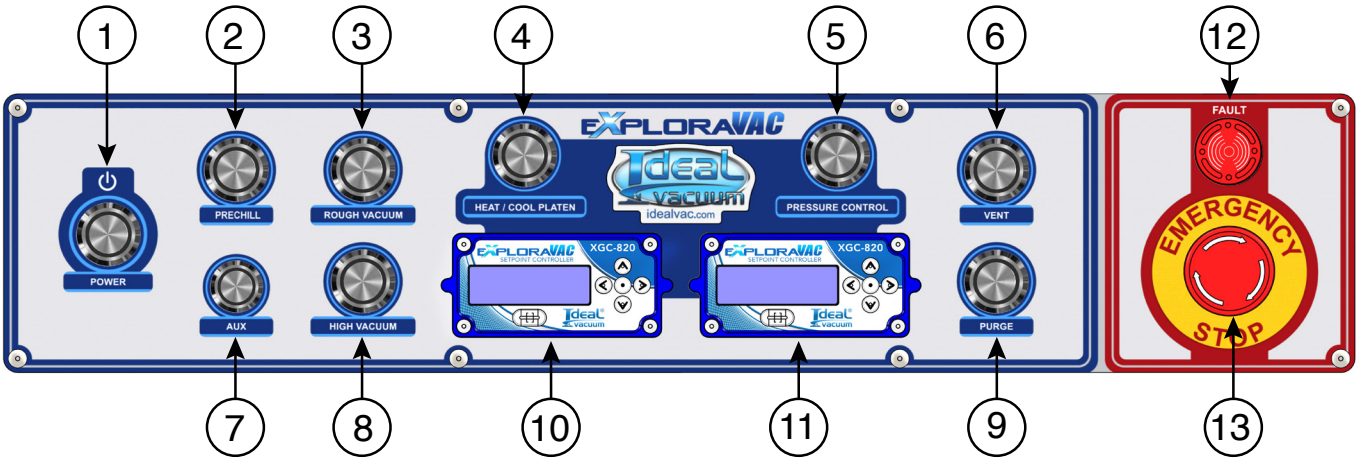

Figure 13 - Control panel layout

Item	Description
1	Power Switch
2	Prechill Switch (included on some platen cooling equipped systems)
3	Roughing Switch
4	Heat/Cool Platen Switch (included on platen equipped systems)
5	Pressure Control Switch (included on altitude/pressure control equipped systems) *Note - This switch is renamed Chamber Heat in systems with chamber heaters and without the pressure control option. In this case, this switch behaves just like the Heat/Cool Platen switch (Sec. 4.9, p. 26).*
6	Vent Switch
7	Aux (Accessory) Switch
8	High Vacuum Switch (included on turbo pump equipped systems)
9	Purge Switch (included on purge gas equipped systems)
10	Temperature Setpoint Controller. (included on platen equipped systems)
11	Pressure Setpoint Controller. (included on Altitude/Pressure control equipped systems) *Note - When the system includes chamber heating but does not include the pressure control option, a Chamber Temperature Controller is put in this location. It works similarly to the Platen Temperature Setpoint Controller (item 10 above). See Sec. 4.12, p. 29.*
12	Fault Lamp with Audible Buzzer
13	Emergency Stop Switch

Table 7 - Control panel operators

3.7 PRESSURE GAUGES

System pressure is displayed on the pressure gauge located in the rack mount below the control panel and on the pressure setpoint controller on some systems.

All roughing-only ExploraVAC systems have a Granville-Phillips 475 Convectron gauge controller installed. It displays chamber pressure which it obtains from the chamber-mounted Convectron (convection-enhanced Pirani gauge). It relays pressure information to the PLC.

All high vacuum, turbo pump equipped ExploraVAC systems have an MKS GP 358 Micro-Ion High Vacuum Gauge Controller which displays chamber and foreline pressure from two convection gauges. An MKS GP 355 Micro-Ion Hot Cathode Vacuum Gauge displays chamber pressure when in high vacuum. When convection gauge pressure is too low, the display reads zero. When the ion gauge pressure is too high, its display is off. A piezo gauge provides roughing line pressure information to the PLC to help optimize high vacuum efficiency. Its pressure is not displayed..

Figure 14 - Granville-Phillips 475

Figure 15 - MKS GP 358

3.8 VALVES

The ExploraVAC system uses pneumatic and/or a combination of pneumatic and smart CommandValve throttling butterfly valves. ExploraVAC MAX systems which have the pressure control option use our electric, smart CommandValve throttling butterfly valves to precisely vary or maintain constant chamber pressure.

ExploraVAC systems, which do not include the pressure control option, use pneumatic valves exclusively. Ideal Vacuum Super-Seal™ bellows valves are used for the roughing and chamber vent lines. In high vacuum systems, the turbo foreline valve and the gate valve between the turbo pump and chamber are also pneumatic. A small, quiet, onboard air compressor with reservoir tank is used on all ExploraVAC systems with pneumatic valves.

All systems include our unique Delta-P™ system protection valve. If the system is under vacuum and a power interruption occurs, this normally open valve immediately closes and vents the roughing pump. It prevents the migration of contaminants (e.g., scroll pump tip seal particles) into the vacuum system, preserves the chamber vacuum, protects the turbo pump from damage, and stops undesirable material from being swept into the system when the pump restarts.

The Delta-P vent is plumbed into the ExploraVAC system exhaust line. This ensures that undesirable gases are not introduced into the personnel work area (when the ExploraVAC exhaust is connected to a facility exhaust system (Sec. 3.10, p. 20).

3.9 DIGITAL FEEDTHROUGH PANEL

The digital feedthrough panel at the right rear of the system is used to operate and control the ExploraVAC system from a connected computer using our AutoExplor software. The computer connects to the DB9 RS232 serial port on the panel. A serial to USB adapter cable is available if the computer does not have a serial port (IVP part number P1012232).

The AUX I/O female DB15 connector on the panel can be used to connect and switch up to two pieces of user supplied external equipment. The AUX switch on the control panel or in AutoExplor software turns the AUX relays on and off for operating outboard connected equipment.

The AUX I/O port is also used to connect external heating/cooling systems, including the Huber Unistat refrigerated heated circulator or the IVP XtremeFreez LN2 liquid nitrogen cooling system. Neither of these two systems use the AUX relays. Using a breakout box, the user can still connect and control equipment through the relays.

The USB service port is used solely by IVP.

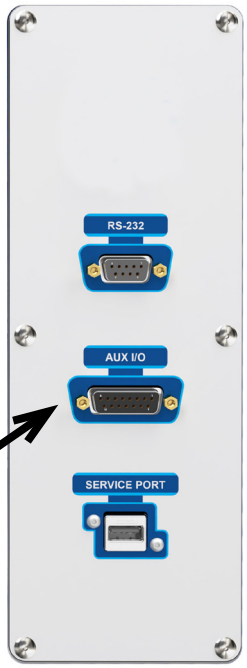

Figure 16 - Digital feedthrough panel

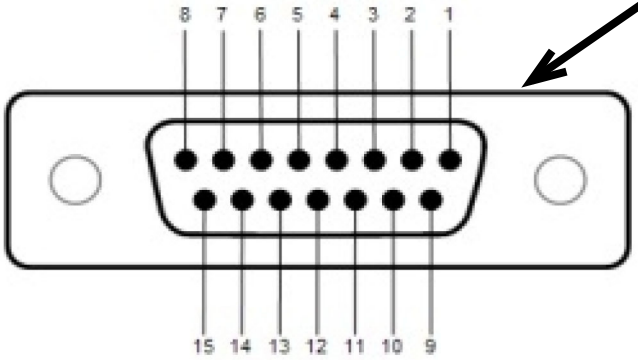

Figure 17 - Auxilliary I/O connector

Pin	Name	Functionality
1	0 V	
2		
3	Ground	
4	24 VDC Input	Toggles Aux 1 Relay On
5	24 VDC Input	Toggles Aux 1 Relay Off
6	24 VDC Input	IVP Use Only
7	24 VDC Output	Aux 2 Output, 1 Amp (software only)
8		
9		
10	Aux 1 Common	Fused at 2 Amps
11	Aux 1 NO	NO Relay Active when Aux 1 is On
12	Aux 1 NC	NC Relay Active when Aux 1 is Off
13	RS232	IVP Use Only
14	RS232	IVP Use Only
15	RS232	IVP Use Only

Table 8 - Aux connector pinout

3.10 EXHAUST/VENT PANEL

NOTICE

Vent and purge aperatures are exposed to vacuum. Particulates can be sucked in and damage the system. Use filters on the vent and exhaust to prevent system damage.

The exhaust/vent panel, at the left rear of the system, has two KF flanged piping connections. The KF-25 flange is for roughing pump exhaust. The second, smaller KF-16 flange is the chamber vent port. These ports can be left open, or used to connect to facility exhaust to evacuate pump gas (particularly corrosive gases) away from the personnel work area.

If the system is equipped with the purge gas option, a Swagelok® bulkhead fitting is installed which accepts a 1/2” OD tube. This connection allows the user to inject high purity, oxygen, or water free gas into the chamber. Maximum allowable purge gas pressure is 250 PSIG.

Figure 18 - Exhaust, vent and purge panel

3.11 SAMPLE THERMOCOUPLES

For ExploraVAC instruments equipped with a platen, a KF16 port with a dual K type thermocouple feedthrough for collecting sample temperatures is provided on the back of the chamber. Two additional female thermocouple mini connectors, located at the back of the chamber, are wired into the system. These two connectors can be extended with thermocouples and routed through the ISO 200 or custom chamber ports. Temperature data from all four thermocouples are collected and are displayed as sample readouts in the AutoExplor software. Any one of the four thermocouples can also be used in the Platen Temperature setpoint controller (Sec. 4.12, p. 29).

Thermocouple expansion modules with up to sixteen additional thermocouples are available to the user who requires more than four sample temperature readings. Expansion modules can be ordered with any thermocouple type and are supplied as KF-40 feedthroughs. Similar to the standard thermocouples included in all ExploraVAC instruments, expansion module thermocouples are displayed as additional sample readouts in the AutoExplor software and may be used in the Platen Temperature Setpoint Controller.

3.12 PLATEN (OPTION)

The platen option can be configured with heating only, cooling only, or both heating and cooling. A thermocouple built into the platen measures temperature which it relays to the PLC. Any platen option includes the IVP XGC-820 temperature setpoint controller (Sec. 4.12, p. 29).

Platens are constructed from 6061-T6 aluminum plate for fast, even heating and cooling cycles, and have a standard 1” threaded (1/4”x20) breadboard patten for mounting test items. Stainless steel fluid transfer platen tubes and/or electric heater elements are installed according to the system configuration. Chamber size dictates platen size and heating power.

A solid state recirculating thermal fluid system (TCube), with combined heating and cooling capability, is used when moderate platen temperatures are required. This system has a temperature range from 0°C to 65°C. Thermal transfer fluid is pumped through the platen tubes to achieve the desired temperature.

A more robust and faster refrigerated recirculating chiller is used for platen temperatures down to -70°C. For temperatures up to 375°C (400°C is the absolute hard limit), electric heater elements are embedded into the platen. When a system has both the recirculating chiller and heater elements installed, chilled coolant fluid is automatically used to more quickly cool the platen when the platen is below 60°C. Table 9 on the next page shows the specifications of the -70°C refrigerated chiller system with electric heater elements for systems with different size chambers (at atmosphere). Chamber pressure greatly effects the rate at which the platen can heat and cool.

Also available are three refrigerated heated circulator systems in which heated or cooled thermal transfer fluid is pumped through the platen tubes to achieve the desired temperature. The Huber Unistat® 405 is capable of temperatures from -40°C to 225°C. The larger Huber Unistat 705 and 815 systems can reach temperatures from -60°C to 225°C. Note that these extremes are for non-loaded systems. System performance may decrease depending on the thermal load.

For the ultimate in platen heating and cooling and for maximum speed, our XtremeFreez LN2 liquid nitrogen cryogenic cooling system (P1012780) is available in combination with electrical platen heating. This option has the largest possible temperature range (-170°C to 375°C).

Both the Huber and the XtremeFreez systems are connected to the ExploraVac via a pair of insulated inlet/outlet fluid tubes. Depending on the system,electrical power may be supplied through the ExploraVac, or may require a separate power feed. Platen temperature is controlled by the Heat/Cool platen switch (Sec. 4.9, p. 26) via a signal cable that connects to the ExploraVac’s AUX I/O port (Sec 3.9, p. 19).

⚠ CAUTION

Burn Hazard. Exterior chamber surfaces can reach up to 70°C (160°F) when the platen is at maximum temperature (375°C/700°F)

⚠ CAUTION

Frostbite or Burn Hazard. Do not touch bare fluid valves, connectors, or lines during operation.

Chamber Inside Dimensions	12x12x12”	16x16x16”	20x20x20”	24x24x24”
Platen Dimensions	11x11x2”	15x15x2”	19x19x2”	23x23x2”
Max Temp.	375°C	375°C	375°C	375°C
Max. Heating Rate	6 °C/min	8 °C/min	10 °C/min	10 °C/min
Setpoint Accuracy (cooling w/ heaters)*	± 0.3°C*	± 0.3°C*	± 0.3°C*	± 0.3°C
Setpoint Accuracy (cooling only)	± 10°C	± 10°C	± 10°C	± 10°C
Heating Power	900 W	2000 W	3300 W	5000 W
Heating Power Density	7.4 W/in^2	8.9 W/in^2	9.2 W/in^2	9.5 W//in^2
Min. Temp.	-70°C	-70°C	-70°C	-70°C
Cooling Rates (Prechilled)	25-->0°C, 1 min 25-->-35°C, 12 min 25-->-70°C, 100 min	25-->0°C, 1.5 min 25-->-35°C, 18 min 25-->-70°C, 150 min	25-->0°C, 2 min 25-->-35°C, 26 min 25-->-70°C, 215 min	25-->0°C, 2.5 min 25-->-35°C, 35 min 25-->-70°C, 285 min
Cooling Rates (Not Prechilled)	25-->0°C, 15 min 25-->-35°C, 55 min 25-->-70°C, 275 min	25-->0°C, 25 min 25-->-35°C, 85 min 25-->-70°C, 425 min	25-->0°C, 35 min 25-->-35°C, 120 min 25-->-70°C, 600 min	25-->0°C, 45 min 25-->-35°C, 160 min 25-->-70°C, 800 min
Cooling Power	525 W @ 0°C 475 W @ -35°C 35 W @ -70°C	525 W @ 0°C 475 W @ -35°C 35 W @ -70°C	525 W @ 0°C 475 W @ -35°C 35 W @ -70°C	525 W @ 0°C 475 W @ -35°C 35 W @ -70°C

** Platen heating setpoint accuracy with a 1.5°C* overshoot with a 20 minute settling time.
Note - Items in gray text are calculated values.

Table 9 - Platen with resistive heating and recirculating chiller specifications

3.13 CHAMBER WALL HEATER (OPTION)

The chamber heating option is available on ExploraVacs with modular aluminum IVP Cube chambers. Heater elements are built into specialized aluminum plates for fast heating and cooling cycles, and can replace any unported chamber wall plate. The vacuum side of the heater plate has a standard 1” threaded (1/4”x20) breadboard patten for mounting test items. The air side has an aluminum anodized shield which helps control convective losses due to ambient conditions and helps protect users from direct contact with the heated plate. Maximum chamber temperature depends on chamber seal material. The hard limit is 150°C for Viton, and 200°C for Silicone seals.

These heater plates safely provide up to 140°C of uniformly distributed heat to the vacuum side of the plate surface through 490W (9” plates) or 810W (12” plates) heating elements. When a single Cube heater plate is used, and the system reaches thermal equilibrium, the rest of the chamber will be approximately 10°C less than the heated plate itself. Multiple heater plates may be used to help eliminate this temperature differential. Maximum heating rate is approximately 2 °C/min. A chamber heater setpoint controller is installed on systems with this option.

4. OPERATION

Once the unit is physically in place, the turbo is mounted (if included), and power is connected, the system may be energized (power switch). Note that the chamber is shipped under rough vacuum to keep it clean and must be vented before the door can be opened (see Sec 4.6, p. 24). Button switches are illuminated red while in a standby state, and green when that device is on or running. Blinking or alternating switch colors indicate various other conditions (see Sec. 4.13, p. 31).

4.1 MAIN POWER SWITCH/DISCONNECT

Rotate the main power switch/system disconnect on the face of the cabinet to energize the system. When the handle is horizontal, the system is energized.

4.2 POWER SWITCH

When the Main Power Disconnect is turned on, the POWER switch will light red. When pressed, the POWER switch will light green. All other switches will light red. All valves will be in their normally closed states. The PLC will initialize, the XGC-820 setpoint controllers (if installed) and the pressure gauge below the control panel will turn on. The system enters a standby state, ready to perform a process.

If, while the system is running, the POWER switch is pressed, it will blink red for 3 seconds. During this time, the system will systematically shut appropriate valves, turn off any device that is on, remove power to the pump(s), then turn off.

4.3 AUX SWITCH

When pressed, the AUX switch will light green. The user's outboard equipment, connected to the AUX I/O relays on the digital feedthrough panel at the back of the ExploraVAC cabinet, will be powered on. (See Section 3.9, p. 19)

4.4 ROUGH VACUUM SWITCH

When pressed, the ROUGH VACUUM switch will light green. The nXDSi dry scroll roughing pump will energize, the roughing valve will open, and the chamber will begin to pump down. The chamber will ultimately reach a pressure of about $2x10^{-2}$ Torr (20 mTorr). The smaller the chamber, the more quickly ultimate pressure is achieved. The pressure gauge below the control panel will display chamber pressure.

If the system is in roughing mode and the ROUGH VACUUM switch is turned off, the roughing valve will close and the roughing pump will turn off. This allows the chamber to remain under rough vacuum. The POWER switch will remain on (green).

4.5 HIGH VACUUM SWITCH (OPTION)

The HIGH VACUUM switch is installed on turbo pump equipped systems.

If the ROUGH VACUUM switch is on (green), and the roughing pressure is at or below the crossover threshold (factory set at 2 Torr), pressing the HIGH VACUUM icon will initiate high vacuum mode and the HIGH VACUUM icon will turn green.

If the roughing pump is off, or the pressure is above the crossover threshold when the HIGH VACUUM switch is pressed, the HIGH VACUUM icon will blink green indicating the system is in standby to go to high vacuum. System logic is optimized for speed and determines when the turbo pump begins spinning up during roughing.

Once the crossover threshold is reached, the roughing valve closes, the foreline and gate valves open, the gate valve opens, and chamber pressure goes into high vacuum.

The ROUGH VACUUM icon cannot be turned off, and neither VENT nor PURGE can be activated when the system is in high vacuum.

When in high vacuum mode, turning off the HIGH VACUUM icon closes all valves and turns off both the turbo and roughing pumps. High vacuum chamber pressure is maintained.

4.6 VENT SWITCH

Venting is allowed only when the turbo and roughing pump are off. If the system is in high vacuum mode, the HIGH VACUUM switch must be turned off before venting is possible.

If the VENT switch is pressed while either the ROUGH VACUUM or PURGE switch is on, the VENT switch will blink green. The roughing pump and/or purge will be turned off and then the vent valve will be opened. Venting will continue and the VENT switch will remain green until it is turned off, one of the pump switches is activated, or the system is shut down.

When either the ROUGH VACUUM or HIGH VACUUM switch is turned on, the vent valve will close and the selected pump sequence will be initiated.

NOTICE

If the chamber is vented with air when the platen is below 0°C, ice will form on the platen. Bring the platen up to room temperature and let dry naturally. Alternatively, to avoid roughing pump or gauge damage, turn on the pump's gas ballast valve and pump the chamber. See the nXDSi or nXRi pump manual for instructions.

4.7 PURGE SWITCH (OPTION)

The PURGE switch is present on systems equipped with the purge gas option.

This option allows a user to introduce high-purity, oxygen or dry gas into the chamber instead of air. Gas pressure into the system must be regulated to no more than 250 PSIG. The system limits purge gas pressure into the chamber to 5 PSIG, and will automatically shut off PURGE if chamber pressure exceeds 1000 Torr. The maximum overpressure can be factory adjusted depending on user requirements.

The HIGH VACUUM switch must be turned off before purging is possible.

NOTE

Before PURGE is activated, evacuate the chamber prior to filling it with any kind of purge gas.

For non-pressure controlled systems:

The PURGE switch behaves like the VENT switch.

If the PURGE switch is pressed when ROUGH VACUUM or VENT is on, the PURGE switch will blink green, turn off the roughing pump or vent, then open the purge valve. Purging will continue and the PURGE switch will remain on until it is switched off, or one of the pumps is activated.

When either the ROUGH VACUUM or HIGH VACUUM switch is pressed, the purge gas valve will close and the selected pump sequence will be initiated.

For pressure controlled systems:

When an ExploraVAC system is equipped with both the purge gas and pressure control options, the pressure setpoint controller includes a settings option entitled MODE (Sec 4.11, p. 27). In the MODE setting, the user can choose to use purge gas rather than vent air to maintain the chamber pressure at a setpoint higher than the roughing pump's ultimate pressure.

Active Purging for pressure controlled systems:

When both the purge gas and pressure control options are installed, the system can also perform "active" purging. Unlike standard purging or venting as described above, active purging allows the roughing pump to remain pumping while simultaneously flowing purge gas into the chamber. With active purging, constant chamber pressure can be maintained to within ± 2%.

To engage active purging, select ***ACTV*** in the pressure controller's MODE setting and enter a pressure setpoint. When the PRESSURE CONTROL switch is turned on, the roughing pump evacuates the chamber to the desired setpoint pressure. Once the setpoint pressure is reached, the system continues roughing while simultaneously flowing purge gas into the chamber, and the setpoint pressure is maintained.

Turning off the ROUGH VACUUM switch will turn off both purging and the roughing pump.

Turning off the PURGE switch alone will stop active purging but leave the roughing pump on.

4.8 PRESSURE CONTROL SWITCH (OPTION)

PRESSURE CONTROL WORKS IN THE ROUGH VACUUM RANGE ONLY.

The PRESSURE CONTROL switch is installed on systems equipped with the pressure control option. This option includes our electric smart CommandValve throttling butterfly valves and the XGC-820 pressure setpoint controller. Pressure control is used for altitude simulation and for experiments or processes which require accurate maintained pressure.

HIGH VACUUM must be turned off before the PRESSURE CONTROL switch can be turned on. When the PRESSURE CONTROL switch is pressed, the system automatically turns off venting and purging, then turns on pressure control. The PRESSURE CONTROL switch will light green.

The system uses the pressure setpoint controller to rough to the desired setpoint pressure (Sec. 4.11, P. 27). Once the system settles, setpoint accuracy is ± 0.5%.

4.9 HEAT/COOL PLATEN SWITCH (OPTION)

The HEAT/COOL PLATEN switch is installed on systems equipped with a platen. The platen may be configured with heat only, cooling only, or both heat and cooling (Sec. 3.11, p. 21).

When the HEAT/COOL PLATEN switch is pressed, the switch will light green. The system will immediately begin to heat or cool the platen to the temperature saved in the temperature setpoint controller (Sec. 4.12, p. 29). When the platen has both heating and cooling, desired temperatures can be maintained to ± 0.3°C (see Platen specifications and performance, p.22). When a platen has only the cooling option (no heat), temperature can be held to within ± 10°C.

4.10 PRECHILL SWITCH (OPTION)

The PRECHILL switch is present only on systems equipped with the -70°C refrigerated recirculating chiller.

When pressed, the chiller system is activated and chills the coolant fluid to the lowest temperature possible, without circulating the coolant through the platen. Prechilling the coolant fluid reduces the time required for the platen to achieve a low setpoint temperature (Sec. 3.11, p. 21).

When the TCube, the Huber, or the XtremeFreez LN2 system is installed, the PRECHILL switch is not available. These systems begin to heat or cool when the HEAT/COOL PLATEN switch is engaged and begin to heat or cool the platen to the saved setpoint controller temperature.

The TCube turns on with the POWER switch, and will chase the setpoint temperature, even if the setpoint controller isn't on. If no setpoint has been entered, then the TCube will automatically prechill its thermal transfer fluid to -5°C.

Huber systems mounted inside in the ExploraVac power on with the system. Outboard Huber systems are powered on separately.

4.11 PRESSURE SETPOINT CONTROLLER (OPTION)

The XGC-820 presure setpoint controller is installed on systems equipped with the pressure control option. It is located below the PRESSURE CONTROL switch on the control panel. It is used to display and change setpoint pressure, ramp rate, soak time and venting mode.

Setpoint pressure is the ultimate pressure you want the system to maintain.

Ramp rate is the speed at which the chamber goes from its current pressure to the desired pressure. Ramp rate is often used for altitude simulation, where a test item is subjected to faster or slower ramp rates. Ramp rate is measured in units/min. The ramp rate limit is determined by the size of the chamber and the pump speed. The ramp rate can also be set to MAX, which will force the system to get to the setpoint pressure as quickly as possible. Where a set ramp rate is a linear function, the MAX rate will be a curve.

For a 24” chamber with an nXDS20i roughing pump, the maximum possible ramp rate is approximately 25,000 ft/min. On a 12” chamber, the ramp rate increases to about 200,000 ft/min. For processes, a 24” chamber will achieve ultimate pressure of 20 mTorr in 25 minutes. A 12” chamber will reach 20 mTorr in 7 minutes with the same roughing pump.

Soak is the amount of time, after the setpoint pressure is reached, that the setpoint pressure is maintained. When the soak time has elapsed, valves are closed and the roughing pump is turned off.

When the POWER switch is pressed, the XGC-820 turns on. The controller’s home screen shows the current chamber pressure, setpoint pressure, ramp rate or soak time, and if the system will be using the vent or the purge valve (if the system is equipped with the purge gas option). Figure 19 below, shows the controller’s home page. Figure 20 on page 28 shows its flowchart.

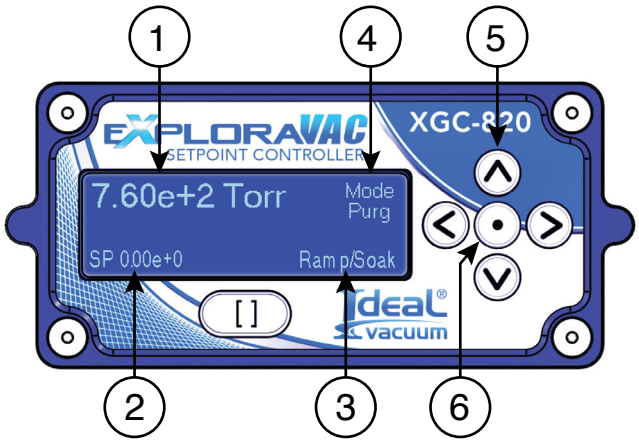

Figure 19 - Pressure controller home page

Item	Description
1	Chamber Pressure (in user selected units) (in exponential notation)
2	Setpoint Pressure (in same units as chamber pressure) (in exponential notation) (reads 0.00e+0 if no setpoint is saved)
3	Ramp Rate or Soak Time (ramp rate changes to soak time when setpoint pressure is reached. If no soak time is saved, ramp rate is displayed)
4	Vent, Purge Gas or Active Purge Mode
5	Arrow Buttons (used to negotiate through the menus)
6	Select/Enter Button (used to make a selection or save a parameter value)

Table 10 - Pressure controller display items

To negotiate the menu heirarchy:

- Press the center SELECT/ENTER button to go down (right) one tier.
- Press the LEFT ARROW button to go to the left (up) one tier.
- Press the UP or DOWN ARROW button to move vertically in the same tier.
- Press the UP or DOWN ARROW to increase or decrease a value.
- Press the SELECT/ENTER button to save a value.
- Arrows on the flowchart boxes below indicate which arrow buttons are active for that menu item.

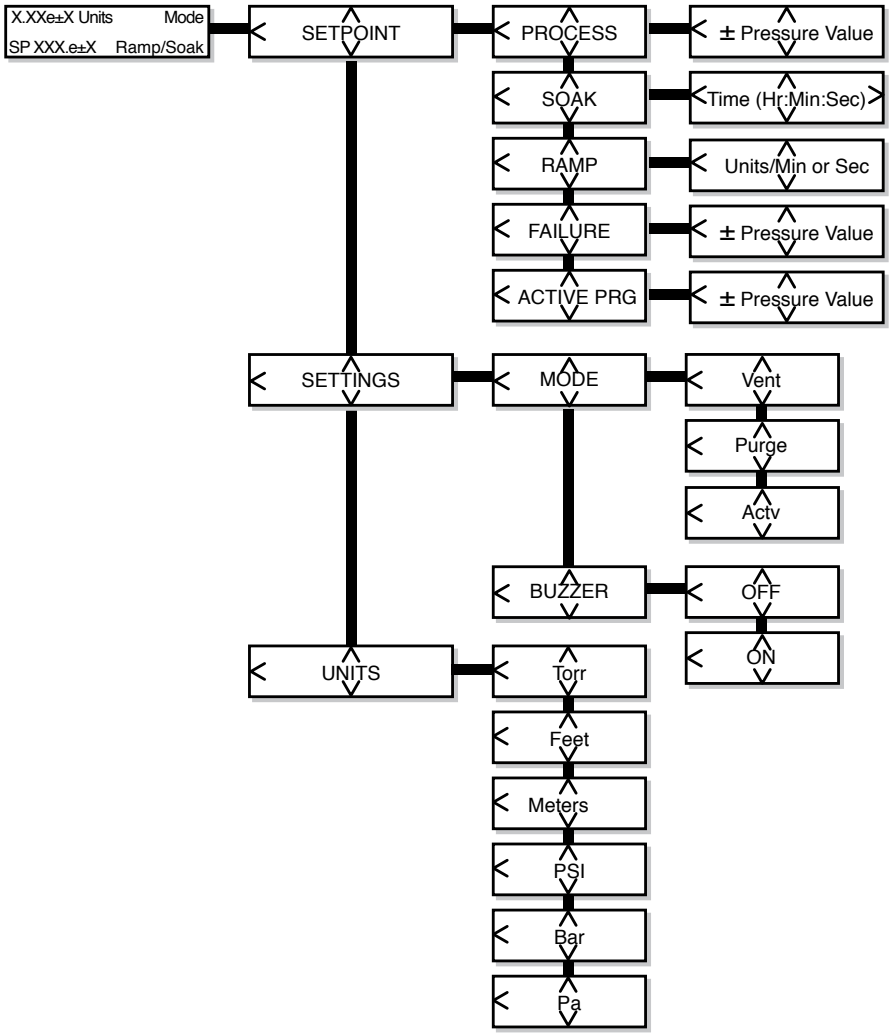

Figure 20 - Pressure controller menu flowchart

- PROCESS is the pressure value you want the system to maintain (the setpoint).
- SOAK is the amount of time after reaching the setpoint that the pressure will be maintained.
- RAMP is the rate at which the pressure increases or decreases towards the setpoint (process).
- FAILURE is the pressure above the setpoint when the system will automatically shut off and alarm. This setting ensures that your sample or the system will not be damaged.
- ACTIVE PRG is the active purging pressure (setpoint) value you want the system to maintain.

4.12 TEMPERATURE SETPOINT CONTROLLER (OPTION)

The XGC-820 temperature setpoint controller is installed on systems equipped with a platen . The controller is located below the HEAT/COOL PLATEN switch on the control panel. It is used to display and change setpoint temperature, ramp rate and soak time.

Setpoint temperature is the temperature you want the system to maintain.

Ramp rate is the speed with which the platen heats or cools from its initial state to the setpoint value. The maximum ramp rate varies depending on platen size, heating and cooling system, and other factors. The ramp rate can be set to MAX, which forces the platen to get to temperature as quickly as possible. Where a set ramp rate is a linear function, the MAX rate will be a curve. The specifications of your ExploraVac instrument are found in the printed datasheets and performance graphs supplied with the system.

Soak is the amount of time after the setpoint temperature is reached that the temperature is maintained. When the soak time has elapsed, the platen heaters and/or recirculating chiller (if equipped) will turn off. Platen temperature will naturally heat or cool to ambient temperature.

Figure 21, below, shows the temperature controller's home page The home page displays the current thermocouple temperature, setpoint temperature, ramp rate or soak time, and the thermocouple that it is using. The top right of the screen shows PLTN to show that this is the PLATEN TEMP controller. Below PLTN is the platen MODE (the thermocouple that the setpoint controller is reading. Below in Figure 21, SAM1 is chosen and indicates that the setpoint controller is reading the SAMPLE1 thermocouple.

Figure 22 on page 31 shows the PLATEN TEMP controller's flowchart.

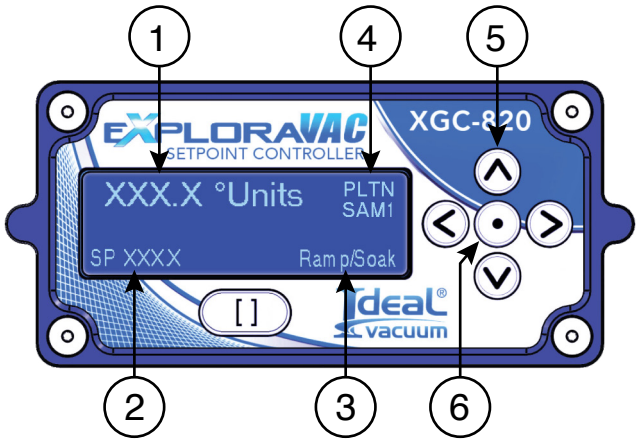

Figure 21 - Platen Temp controller home page

Item	Description
1	Platen Temperature (in user selected units) (resolution of 0.1 degree)
2	Setpoint Temperature (in same units as platen temperature)
3	Ramp Rate or Soak Time (if a soak time is saved, ramp rate changes to soak time when setpoint temperature is reached. Otherwise, only ramp rate is displayed.
4	Platen Mode (indicates the thermocouple the controller is using. PLTN uses the thermocouple embedded in the platen. SAM1-SAM4 are the feedthrough thermocouples which could be attached to a sample or test object)
5	Arrow Buttons (used to negotiate through the menus)
6	Select/Enter Button (used to make a selection or save a parameter value)

Table 11 - Temperature controller display items

Changing the PLTN Mode:

The PLTN MODE is available only on ExploraVac systems with serial numbers above 12800.

It is used to select the thermocouple that the PLATEN TEMP setpoint controller uses. Use the flowchart on page 31 to select the thermocouple mode.

There are five mode options: PLATEN, SAM1, SAM2, SAM3, or SAM4. By default, the thermocouple embedded in the platen is used by the setpoint controller (PLTN mode). This mode works well when a test object is directly attached to the platen.

When a test object is fixtured or otherwise at some distance from the platen, the platen and test object may be at different temperatures. This can be due to the delayed heat transfer from the platen to the object, or because the object is far enough away from the platen that it stabilizes at a different temperature than the platen. This is referred to as a delayed system.

While it may be possible to experimentally determine the platen setpoint temperature required for the object to achieve the desired stable temperature, a more precise, repeatable, and faster method is to change the mode to one of the SAM modes. Selecting the SAM 1, 2, 3 or 4 modes changes the thermocouple used by the PLATEN TEMP controller to one of the SAMple thermocouples (SAM1 and SAM2 correspond to the two thermocouples factory routed through the chamber feedthrough). The selected SAM thermocouple is attached directly to the test object.

While using one of the sample thermocouple modes, if there is a significant system delay between the platen and test object temperatures, considerable setpoint temperature overshoot can occur.

If the platen is heated at the MAX ramp rate until the object reaches the setpoint, excess platen heat will be transferred to the object after the setpoint is reached. The object will experience a significant temperature overshoot and it will take a long time for the object temperature to stabilize.

A better technique is to first ramp the temperature at the MAX rate to a setpoint lower than the object target temperature. Then, use a lesser ramp rate to slowly approach the desired temperature.

In this case, the maximum platen temperature will be decreased and it will start cooling much faster. This will reduce and slow the amount of heat transferred into the object. The result will be an overshoot of only a few degrees and a much decreased temperature stabilization time.

For even better control when using sample thermocouple modes, ***AutoExplor*** recipe capability can be used to automatically switch the ramp rates. This will reduce cycle time.

To negotiate the menu heirarchy:

- Press the center SELECT/ENTER button to go down (right) one tier.
- Press the LEFT ARROW button to go to the left (up) one tier.
- Press the UP or DOWN ARROW button to move vertically in the same tier.
- Press the UP or DOWN ARROW to increase or decrease a value.
- Press the SELECT/ENTER button to save a value.
- Arrows on the flowchart boxes below indicate which arrow buttons are active for that menu item.

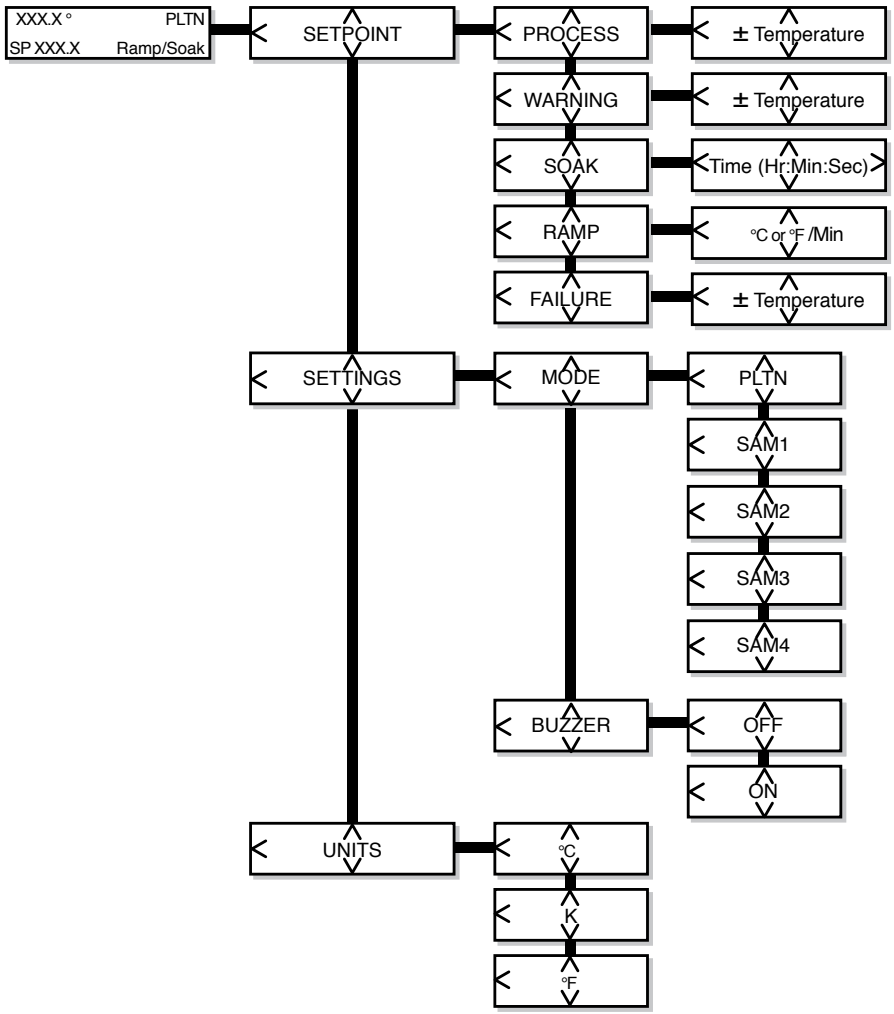

Figure 22 - Temperature controller menu flowchart

- PROCESS is the temperature for the system to maintain (the setpoint).
- WARNING is the temperature above the setpoint that the HEAT/COOL PLATEN switch will begin to blink green/yellow to indicate a potential problem. The platen will continue to operate.
- SOAK is the amount of time after reaching the setpoint that the temperature will be maintained.
- RAMP is the rate at which the temperature increases or decreases towards the setpoint (process).
- FAILURE is the temperature above the setpoint when the system will automatically shut off and alarm. This setting ensures that your sample or the system will not be damaged.
- MODE is the thermocouple that the setpoint controller uses.

4.13 FAULTS

The fault light will blink and an audible buzzer will sound when a fault condition occurs. The effected subsystem switch will blink red (see Sec. 4.14, below). If the fault is because a device exceeds its parameters (i.e., an over temperature situation), the fault may self-correct. If the fault is because of equipment failure, the fault will persist. The effected device will need to be corrected before it will function.

Failure	Switch Blinks Red/Fault Alarm Activates
Platen over temperature or thermocouple failure	Heat/Cool Platen
Chamber over pressure	Vent, Purge
Roughing pump over temperature	Rough, Pressure Control
No air tank pressure	High Vacuum (if no Pressure Control: Vent, Rough, Purge)

Table 12 - Faults and effected subsystem(s)

4.14 WARNINGS AND OTHER SUBSYSTEM CONDITIONS

The system provides additional visual feedback about the state of its subsystems and devices. When switches are not illuminated, power is off. When lighted red, the subsystem is in a standby state, ready to be turned on. When lighted green, a subsystem is on.

The information in Table 13 below, describes subsystem or device transitional conditions, warnings or fault indications.

Panel Switch	Blinking Red	Blinking Green	Alternating Green/Yellow	Alternating Green/Red	Blinking Yellow
Power	Powering off				
Rough	Rough pump temp. too high	Pump not starting	Rough pump temp. high		
High Vacuum		Standby for rough limit	Turbo spinning up	Turbo spinning up,gate valve closed	Coasting down
Vent	Chamber over pressure	In vent mode, valve not open			
Heat/Cool Platen	Over setpoint failure temp.		Over setpoint warning temp.		
Purge	Chamber over pressure	In purge mode, valve not open			

Table 13 - Other subsystem condition codes

4.15 SYSTEM SHUTDOWN

Use the POWER switch to turn off the system at any time. This initiates a sequential, deliberate, system shutdown in the following order:

1. Gate valve, then all other valves close.
2. The turbo, then the roughing pump turns off.
3. All control panel switches turn off.
4. The red POWER light remains on.

4.16 EMERGENCY STOP SWITCH

DO NOT USE EMERGENCY STOP TO TURN OFF THE SYSTEM UNLESS ABSOLUTELY NECESSARY.

Press the POWER switch to initiate an ordered system shutdown.

If the EMERGENCY STOP is engaged at any time, the system immediately closes all the pneumatic valves, protecting the turbo, then all subsystems are de-energized.

If running the full version of AutoExplor, the data logs are saved up until the moment when the emergency stop switch is used. The availability of these logs can assist the user with system diagnostics. See the AutoExplor User Manual for more information about logs.

5. SERVICE AND MAINTENANCE

DANGER

De-energize and lockout the system before removing cabinet panels or attempting to perform maintenance or service on the system. High voltage inside.

WARNING

Before performing maintenance or service, the chamber must be vented and brought to ambient atmosphere.

WARNING

Before performing maintenance or service, the refrigeration system must be brought to ambient temperature. Direct exposure to an extremely cold platen, the refrigeration lines, or the thermal fluid could cause immediate frostbite.

CAUTION

Always wear protective equipment, including safety glasses and gloves when working with any vacuum system or component.

NOTE

The ExploraVAC system is not field upgradeable. To add options, it must be reconfigured by Ideal Vacuum.

ExploraVAC systems are built with premium components and quality engineering. Systems are designed to operate with very little user maintenance. Follow the suggested routine maintenance schedule (Sec. 5.1, p. 35) to keep your system in top operating condition for many years.

Periodically wipe the exterior of the system with a damp rag and mild cleaning solution. Dust and remove any oil or dirt buildup inside the cabinet panels, on pumps, the compressor, fans, etc. Use a cloth or paper towel wetted with ispopropanol.

More accurate service intervals based on equipment sensors, valve counts, etc. are available within the ExploraVAC AutoExplor software.

For assistance with service parts, please visit the idealvac.com website, or call to speak with one of our customer service representatives.

5.1 SERVICE SCHEDULE

Item	Service Interval											
	Months							Hr	Cycles			
	1	3	12	24	48	60	120	20k	100k	500k	1.5M	2M
Edwards nXDSi Roughing Pump (All)			X									
Clean inlet strainer & external fan cover			X									
Replace exhaust filter			X									
Check & replace tip seals (as necessary)				X								
Replace pump- bearings						X						
Edwards nXRi Roughing Pump (All)			X									
Clean inlet strainer & external fan cover			X									
Replace exhaust filter			X									
Replace pump- bearings						X						
Replace pump controller							X					
Huber 405/705 Heating/Cooling System												
Check perforated sheet, clean as needed	X											
Thermal fluid inspection Replace as required	X											
Empty drip tray	X											
Check liquifier fins and hat-type strainer		X										
Check air filter mats		X										
Onboard Air Compressor												
Replace filter element			X									
IVP Super-Seal Pneumatic Valves												
Rebuild or replace											X	
IVP CommandValve												
Rebuild KF-16 or replace										X		
Rebuild KF-25 or replace										X		
IVP Delta-P Valve												
Rebuild or replace												X
IVP XactGauge Convection Gauges												
Rebuild or Replace KF-16							X					
Rebuild or Replace KF-25							X					
HVA Gate Valve												
Rebuild or replace ISO 63									X			
Rebuild or replace ISO 100									X			
MKS GP 355 Micro-Ion Gauge												
Degas		X										
Replace								X				

Table 14 - Recommended preventive maintenance schedule

For service or replacement procedures, see the product owner's manual. Find manuals either on the USB drive included with the ExploraVac, or by part number at idealvac.com. If you need assistance, please contact customer service.

6. APPENDIX

The datasheet on the next page has the specifications of your built-to-order ExploraVAC system.

Following the datasheet page are actual test performance graphs of your ExploraVAC system.

Ideal Vacuum Products, LLC.
5910 Midway Park Blvd NE
Albuquerque, NM 87109

Phone: (505) 872-0037
Fax: (505) 872-9001
Web: idealvac.com