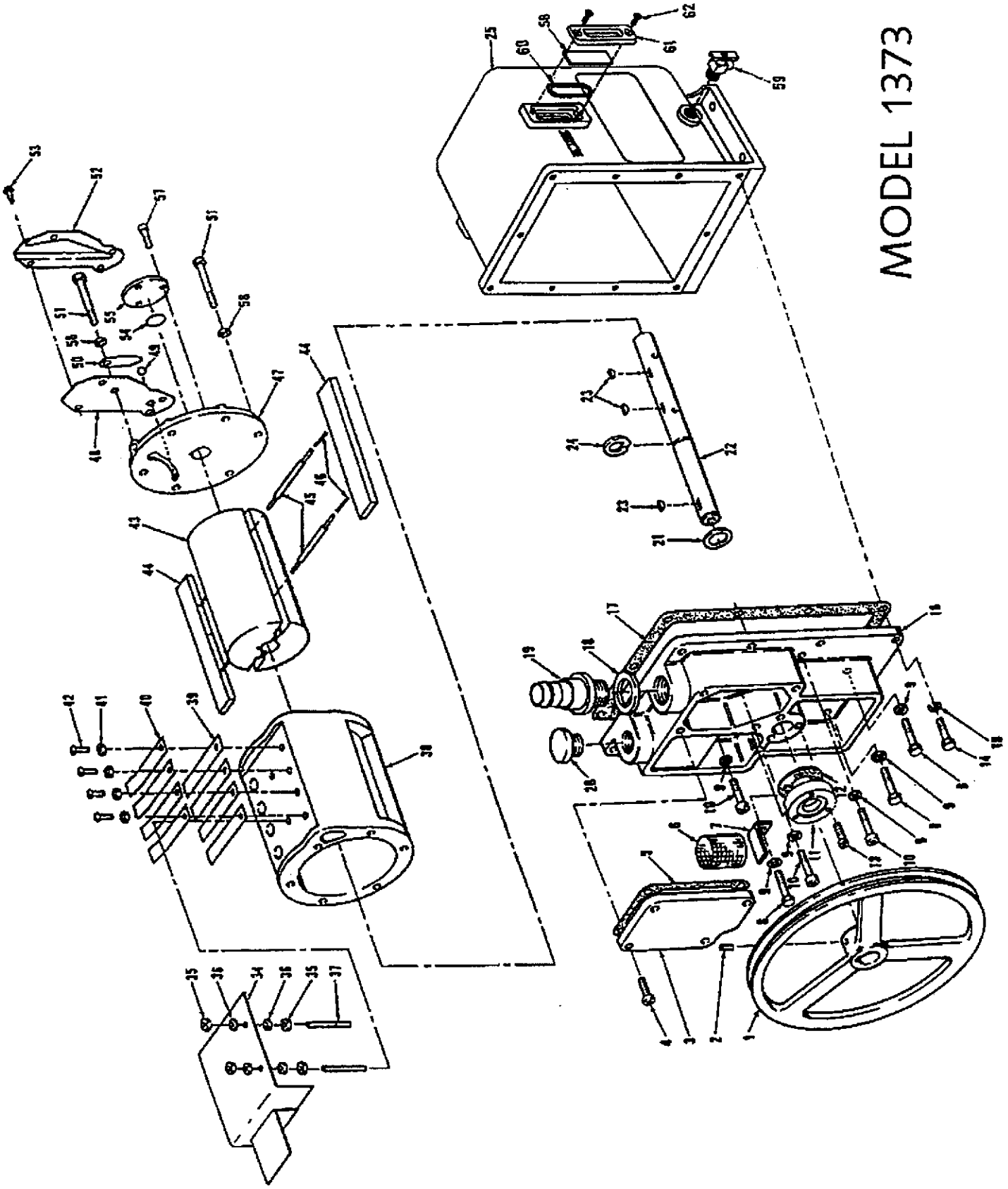
MODEL 1373

PARTS LIST
MODEL 1373 VACUUM PUMP

ITEM	QUAN	PC. NO.	A*	B*	DESCRIPTION
1	1	41-2074			Pulley incl. item 2
2	1	2-01-9306			Soc Hd Set Screw 5/16-18x3/8
3	1	61-8671			Intake Cover Chamber
4	4	2-01-6112			Soc Hd Screw 1/4-20x3/4
5	1	41-0234	1	1	Intake Cover Gasket
6	1	41-1692	1	1	Air Filter
7	1	41-0663			Air Filter Bracket
8	3	2-01-0316			Hex Hd Screw 5/16-18x1
9	6	61-8456A	6	6	Washer, Copper 5/16
10	3	2-01-6316			Soc Hd Screw 5/16-18x1
11	1	1401D-01			Shaft Seal incl. items 12 & 30 **
12	1	41-0643			Seal Gasket
13	3	2-00-6712			Soc Hd Screw 10-32x3/4
14	10	2-01-0114	10	10	Hex Hd Screw ¼-20x7/8
15	10	2-63-0193			Split Lock Washer 1/4
16	1	61-8477D			Large End Plate
17	1	41-0403	1	1	Oil Case Gasket
18	1	61-9284A	1	1	O-ring #214
19	1	61-8468A			Adapter Hose
20	1	41-0612			Dust Cap
21	1	41-0508	1	1	Thrust Washer
22	1	41-1762			Shaft
23	3	41-0624	2	2	Woodruff Key
24	1	4-06-0754	1	1	Retaining Ring
25	1	61-8101			Oil Case incl. items 56, 59, 60, 61 & 62
34	1	61-8499B			Baffle Plate
35	4	2-31-0112			Hex Nut ¼-20
36	4	2-61-3100			Steel Washer 1/4
37	2	2-01-8132			Set Screw 1/4-20x2
38	1	41-1760			Ring
39	4	41-1768	4	4	Lower Exhaust Valve
40	4	41-1779	4	4	Upper Exhaust Valve
41	4	2-61-0000			Steel Washer 3/16
42	4	2-01-5106			Rd Hd Screw 1/4-20x3/8
43	1	41-1761			Rotor
44	2	41-1684	2		Vane
45	2	41-1685	2	2	Vane Spring Holder
46	4	41-1304	4	4	Vane Spring
47	1	41-2045			Small End Plate
48	1	41-1005	1	1	Pressure Release Tube No.2
49	1	4-40-1200	1	1	Steel Ball 3/8
50	1	41-0992	1	1	Pressure Release Valve
51	6	2-01-0320			Hex Hd Screw 5/16-18x1-1/4
52	1	41-0986			Pressure Release Tube No.1
53	3	62-0259			Self Tapping Screw #6x1/4
54	1	41-1766			Thrust Disk
55	1	41-0672			End Cap
56	2	61-2229A			Oil Window Glass
57	3	2-00-2706			Fil Hd Screw 10-32x3/8
58	6	41-2363			Washer
59	1	41-1734			Drain Valve
60	2	61-2231	2	2	O-Ring Tetr. #127
61	2	61-2228A			Cover, Oil Window
62	4	61-2232			Flat Hd Screw #8-32x1/2
		1-99-5282	1	1	Sealant, 6 cc
		1401D	1	1	Mechanical Seal Option**

A*: MAJOR REPAIR KIT CAT # 1373K-06
B*: MINOR REPAIR KIT CAT # 1373K-05

** 1401D is mechanical seal which fits all model 1380 serial numbers.

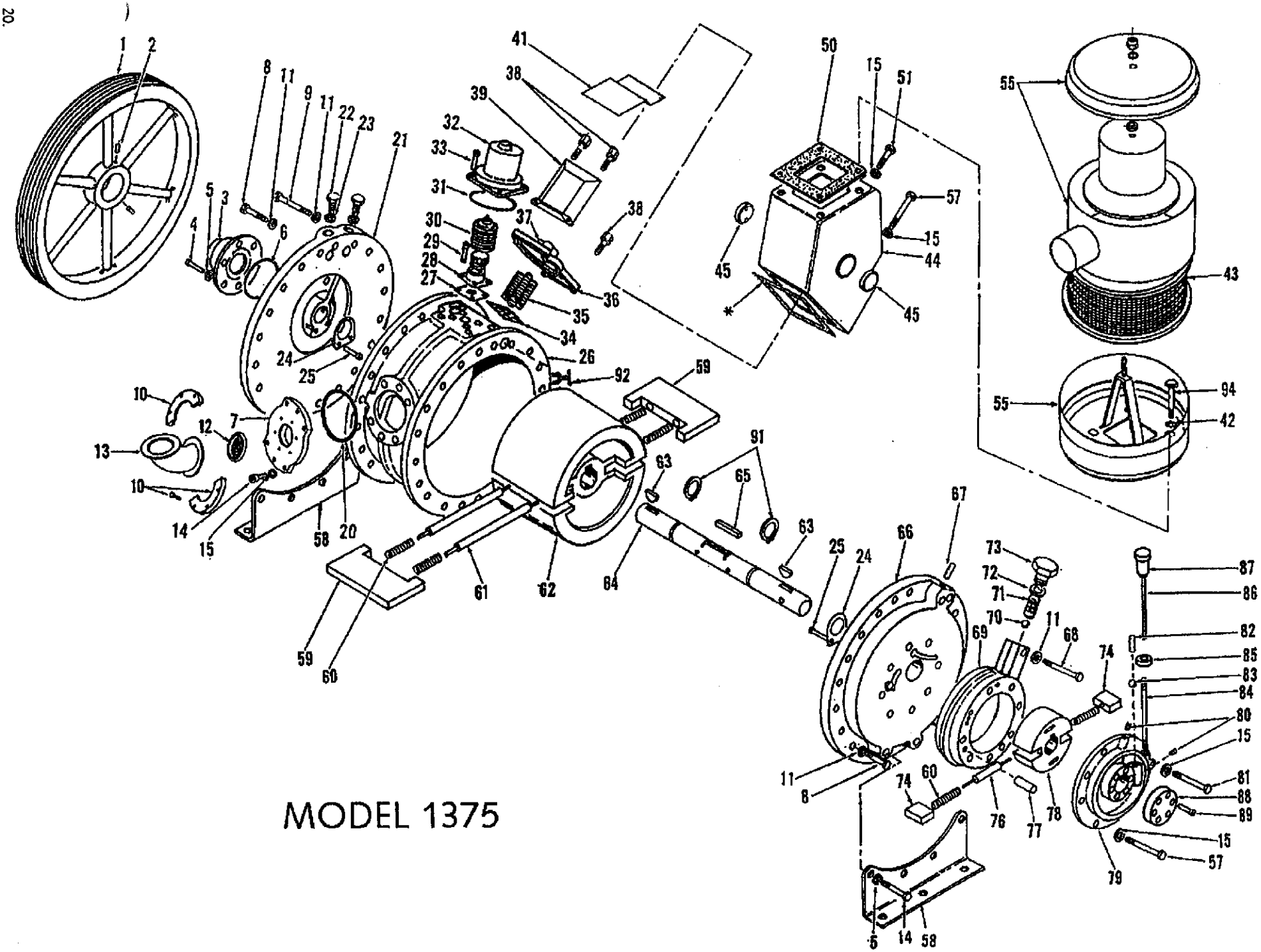
1
2
8
11
9
11
22
23
21
5
3
4
6
41
38
39
32
33
31
30
29
28
27
37
38
36
35
34
24
25
26
92
59
10
12
7
13
10
14
15
58
20
61
62
63
64
65
91
63
59
60
50
15
51
57
15
44
45
45
55
43
55
94
42
67
66
25
24
73
72
71
70
11
68
69
74
87
86
82
85
83
84
80
15
81
88
89
15
57
79
11
8
74
60
76
77
78
5
14
58

MODEL 1375

PARTS LIST
MODEL 1375 VACUUM PUMP

ITEM	QUAN	PC. NO.	DESCRIPTION
1	1	41-1714	Pulley incl. Item 2
2	2	2-01-9306	Soc Hd Setscrew 5.16-18x3/8
3	1	41-2491	Shaft Seal
4	6	2-01-0110	Hex Hd Screw 1/4-20
5	6	2-61-0000	Steel Washer
6	1	41-2515	O-ring #237
7	1	61-8611	Adapter Flange
8	32	2-01-0520	Hex Hd Screw 3/8-16x1-1/4
9	1	2-01-0532	Hex Hd. Screw 3/8-16 x 2
10	1	61-8612	Bulkhead Clamp, NW50
11	28	2-61-0571	Steel Washer 3/8x5/8x.071
12	1	61-8613	Centering Ring NW50 w/Screen
13	1	61-8610	72 deg Elbow NW50
14	8	2-01-0316	Hex Hd Screw 5/16-18x1
15	20	41-2363	Washer
20	1	41-2482	O-ring #349
21	1	41-1702	Large End Plate
22	2	41-1136	Plug
23	2	41-1137	Washer
24	2	41-2397	Thrust Spacer
25	4	2-00-2704	Fil Hd Screw 10-32x1/4
26	1	41-1700	Large Ring
27	1	41-2508	Inner Plate For conversion Valve
28	1	41-1504	Valve Spring Unit
29	4	2-01-6308	Soc Hd Screw 5/16-18x1/2
30	1	41-1505	Bellow Valve Unit
31	1	41-1507	O-ring #235
32	1	41-2492	Conversion Valve Cover
33	4	2-01-6312	Soc Hd Screw 5/16-18x3/4
34	1	41-2567	Exhaust Valve
35	4	41-2507	Exhaust Valve Spring
36	1	41-1707	Valve Cover
37	4	41-2485	Spring Retainer
38	4	41-2509	Long Extension Rod
39	1	41-1727	Chimney
41	1	41-2493	Buffle Plate
42	4	2-61-3100	Steel Washer 1/4 Size
43	1	41-1747	Replacement Element For Filter
44	1	41-1728	Oil Case
45	2	41-3753	Oil Sight
50	1	41-2517	Gasket

ITEM	QUAN	PC. NO.	DESCRIPTION
51	2	2-01-0332	Hex Hd Screw 5/16-18x2
55	1	41-1746	Exhaust Filter incl. Item 93
57	9	2-01-0352	Hex Hd Screw 5/16-18x3-1/4
58	2	41-1710	Leg
59	2	41-1724	Large Vane
60	6	41-2952	Vane Spring
61	2	41-1709	Large Spring Holder
62	1	41-1725	Large Rotor
63	2	41-2514	Wodruff Key
64	1	41-2403	Shaft
65	1	41-2473	Large Key
66	1	41-1701	Center Plate
67	1	61-8510	Plug 1/4 NPT
68	1	2-01-0580	Hex Hd Screw 3/8-16x5
69	1	41-1704	Small Ring
70	1	4-40-2000	Steel Ball 5/8 Dia
71	1	41-1719	Cone Spring
72	1	41-0491	Aluminum Washer
73	1	41-1708	Exhaust Valve Cap
74	2	41-2392	Small Vane, Metal
76	1	41-2471	Small Spring Holder
77	2	4-21-3901	Dovel Pin 7/16 Dia x3
78	1	41-2405	Small Rotor
79	1	41-2409	Small End Plate
80	2	41-0374	Pipe Plug 1/8 NPT
81	1	2-01-0364	Hex Hd Screw 5/16-18x4
82	1	41-2521	Ball Check Plug
83	1	4-40-0800	Steel Ball 1/4 Dia
84	1	41-1713	Connecting Tube
85	1	41-2757	Lock Nut
86	1	41-1712	Regulating Rod
87	1	41-2498	Regulator Knob
88	1	41-2470	Shaft End Cap
89	6	2-01-6112	Soc Hd Screw 1/4-20x3/4
91	2	41-2402	Retaining Ring
92	1	41-1722	Drain Cock
94	4	2-01-0312	Hex Hd Screw 5/16-18x3/4
*		1-99-5282	Sealant 6cc
**	1	70-1003	Hinged Clamp NW50
**	1	70-1007	Centering Ring Assy. NW50
**	1	70-1071	Hose Adapter NW 50

** Parts supplied with the Pump but not shown

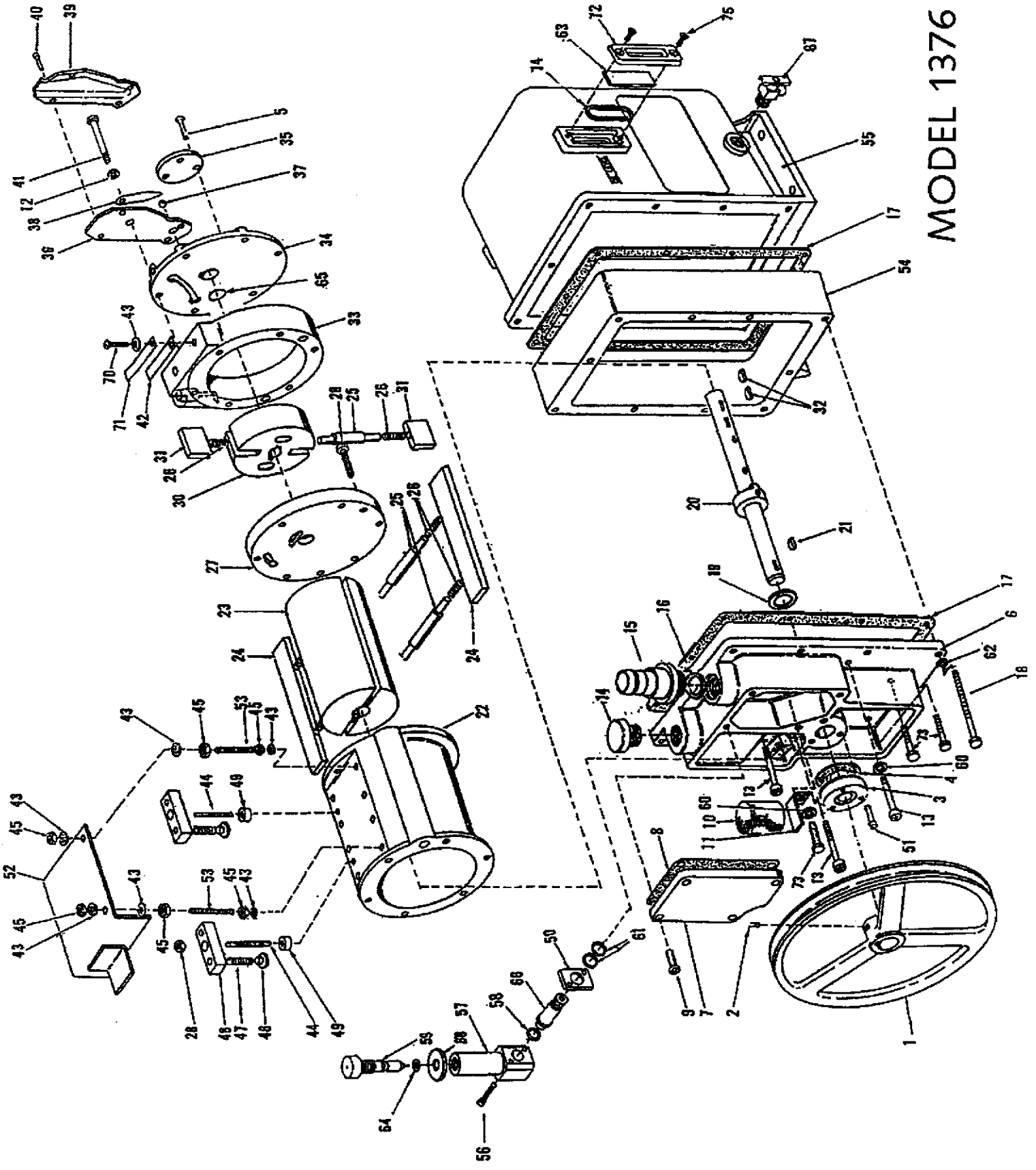
MODEL 1376

PARTS LIST
MODEL 1376 VACUUM PUMP

ITEM	QUAN	PC. NO.	A*	B*	DESCRIPTION
1	1	41-2074			Pulley incl. item 2
2	1	2-01-9306			Soc, Hd. Setscrew 5/16-18x3/8
3	1	61-8378A			Shaft Lip Seal Assy
4	1	41-0643			Seal Gasket
5	3	2-00-2706			Fil. Hd. Screw 10-32x3/8
6	1	61-8685			Large End Plate
7	1	61-8671			Intake Cover
8	1	41-0234	1	1	Intake Cover Gasket
9	4	2-01-6112			Soc. Hd. Screw 1/4-20x3/4
10	1	41-1692	1	1	Intake Screen
11	1	41-0663			Intake Screen Bracket
12	6	41-2363			Washer
13	3	2-01-6316			Soc Hd. Screw 5/16-18x1
14	1	41-0612			Dust Cap
15	1	61-8468A			Adapter Hose
16	1	61-9284	1	1	O-Ring #214
17	2	41-0403	2	2	Oil Case Gasket
18	10	62-0015			Soc. Hd. Screw 1/4-20x3-1/8
19	1	41-0508	1	1	Thrust Washer
20	1	41-1683			Shaft
21	1	41-0624	1	1	Pulley Key
22	1	41-1688			Large Ring
23	1	41-1682			Large Rotor
24	2	41-1684	2		Large Vane
25	3	41-0696	3	3	Spring Holder
26	6	41-1304	6	6	Vane Spring
27	1	61-8250C			Center Plate
28	2	2-36-9900			Lock Nut 1/4-20
29	2	2-01-6320			Soc. Hd. Screw 5/16-18x1-1/4
30	1	41-1518			Exhaust Rotor
31	2	41-1487	2		Small Vane
32	2	41-0613	2	2	Woodruff Key
33	1	61-8108D			Exhaust Ring
34	1	41-2045			Small End Plate
35	1	41-0672			End Cap
36	1	41-1005			Pressure Release Tube Part 2
37	1	4-40-1200	1	1	Steel Ball
38	1	41-0992	1	1	Pressure Release Valve
39	1	41-0986			Pressure Release Tube Part 1
40	3	62-0259			Self Tap Screw #6x1/4 Type 'A'
41	6	2-01-0356			Hex Hd. Screw 5/16-18x3-1/2
42	1	41-2154	1	1	Lower Exhaust Valve
43	7	2-61-0000			Steel Washer 1/4 size
44	2	2-01-8128			Setscrew 1/4-20x1-3/4
45	6	2-31-0112			Hex. Nut 1/4-20x3/16x7/16
46	4	41-2157	4	4	Block Valve
47	4	41-2158	4	4	Valve Spring
48	2	41-2156			Valve Block
49	2	41-2159	2	2	Valve Block Spacer
50	1	61-8102A			Flange For G.B. Valve
51	3	2-00-6712			Soc Hd Screw 10-32x3/4
52	1	41-1686			Baffle Plate
53	2	41-2175			Setscrew (Special)
54	1	61-8687			Oil Case Spacer
55	1	61-8101			Oil Case Assy. incl. items 63, 67, 72, 74, 75
56	2	61-8362			Soc. Hd. Screw 8-32x1
57	1	61-8100A			Gas Ballast Valve Adapter
58	1	61-8103	1	1	O-Ring
59	1	41-1736			Gas Ballast Valve incl. item 64
60	6	61-8456A			Washer Copper 5/16
61	2	41-1056			Washer
62	10	2-63-0193			Split Lock Washer 1/4
63	2	61-2229A			Glass Window
64	1	41-1742	1	1	O-Ring #011
65	3	41-1766			Thrust Disk
66	1	61-8101A			Gas Ballast Connector
67	1	41-1734			Drain Valve
68	1	41-2757			Lock Nut
70	1	2-01-5106			Rd. Hd. Screw 1/4-20x3/8
71	1	41-2153	1	1	Upper Exhaust Valve
72	2	61-2228A			Cover, Window
73	3	2-01-0316			Hex . Hd. Screw 5/16-18x1
74	2	61-2231	2	2	O-Ring Tetr. #127
75	4	61-2232			Flat Hd Screw 8-32x1/2
		1-99-5282	1	1	Sealant, 6 cc
		1401D	1	1	Mechanical Seal option**

A*: MAJOR REPAIR KIT CAT # 1376K-06

B*: MINOR REPAIR KIT CAT # 1376K-05

** 1401D is mechanical seal kit includes mechanical seal, gasket and 3 screws

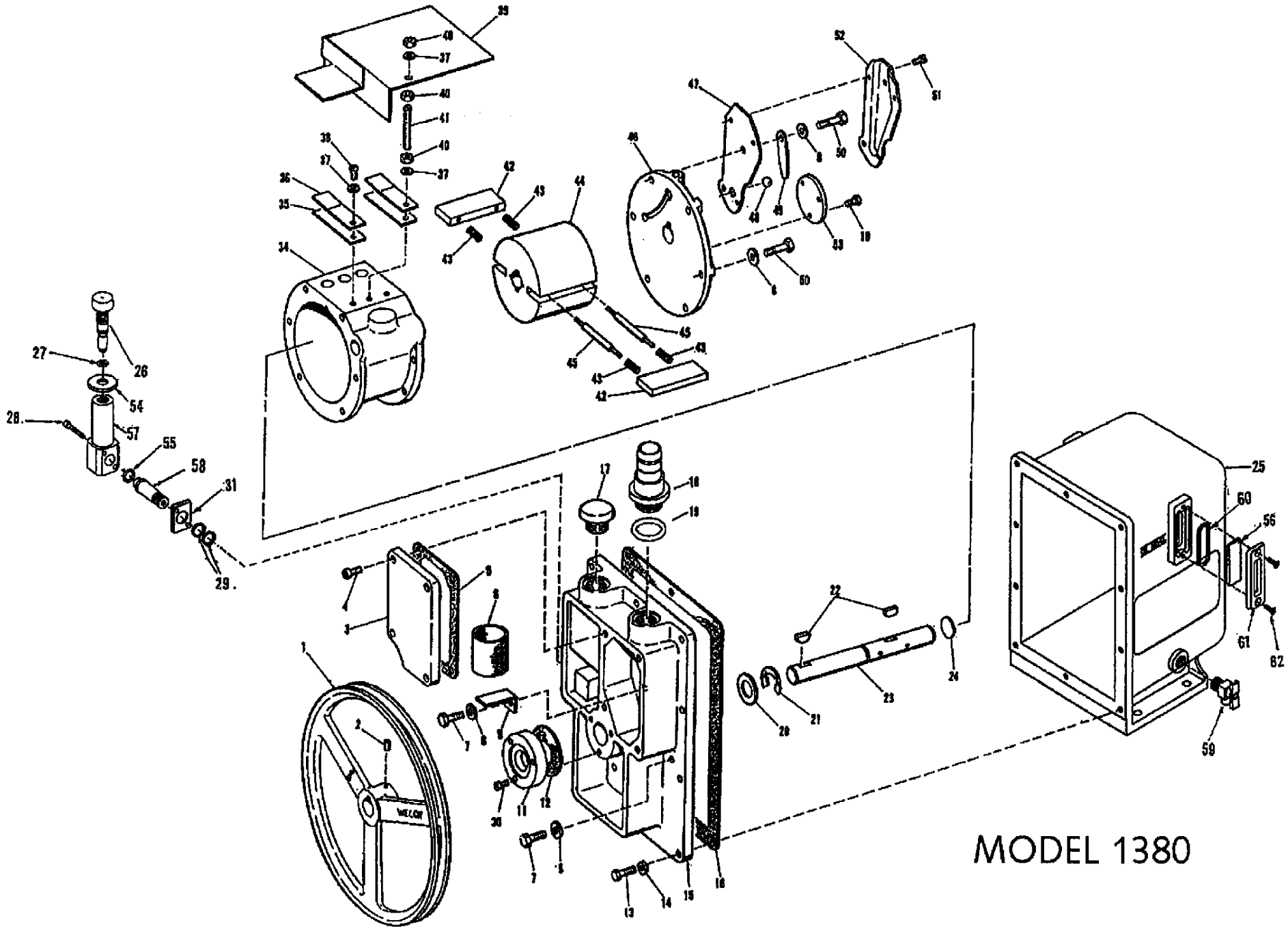
MODEL 1380

PARTS LIST
MODEL 1380 VACUUM PUMP

ITEM	QUAN	PC. NO.	A*	B*	DESCRIPTION
1	1	41-2074			Pulley incl. item 2
2	1	2-01-9306			Soc, Hd. Setscrew 5/16-18x3/8
3	1	61-8671			Intake Cover Chamber
4	4	2-01-6112			Soc Hd Screw 1/4-20x3/4
5	1	41-0234	1	1	Intake Cover Gasket
6	1	41-0660	1	1	Air Filter
7	6	2-01-0316			Hex Hd Screw 5/16-18x1
8	12	41-2363			Steel Washer
9	1	41-0663			Air Filter Bracket
10	3	2-00-2706			Fil Hd Screw 10-32x3/8
11	1	61-8378A			Shaft Lip Seal Assy.
12	1	41-0643			Seal Gasket
13	10	2-01-0114			Hex Hd. Screw 1/4-20x7/8
14	10	2-63-0193			Split Lock Washer 1/4
15	1	61-8505D			Large End Plate
16	1	41-0403	1	1	Oil Case Gasket
18	1	61-8468A			Intake Nipple
19	1	61-9284A	1	1	O-ring #214
20	1	41-0508	1	1	Thrust Washer
21	1	4-06-0754			Retaining Ring
22	2	41-0624	2	2	Woodruff Key
23	1	41-1773			Shaft
24	1	41-1766	1	1	Thrust Disk
25	1	61-8101			Oil Case incl. items 56, 59, 60, 61, 62
26	1	41-1736	1	1	Gas Ballast Valve incl. item 27
27	1	41-1742			O-ring #011
28	2	61-8362			Soc Hd Screw 8-32x1
29	2	41-1056			Aluminum Washer
30	3	2-00-6712			Soc Hd Screw 10-32x3/4
31	1	61-8102A			Flange For Gas Ballast
34	1	41-1772			Ring
35	3	41-1775	3	3	Lower Exhaust Valve
36	3	41-0695	3	3	Upper Exhaust Valve
37	4	2-61-0000			Steel Washer 3/16
38	2	2-01-5106			Rd Hd Screw 1/4-20x3/8
39	1	61-8507B			Buffle
40	3	2-31-0112			Hex Nut 1/4-20
41	1	41-2175			Special Set Screw 1/4-20x2-1/4
42	2	41-0959	2		Vane
43	4	41-1304	4	4	Vane Spring
44	1	41-1771			Rotor
45	2	41-1685	2	2	Vane Spring Holder
46	1	41-2045			Small End Plate
47	1	41-1005			Pressure Release Tube No.2
48	1	4-40-1200		1	1 Steel Ball 3/8
49	1	41-0992	1	1	Pressure Release Valve
50	6	2-01-0318			Hex Hd Screw 5/16-18x1-1/8
51	3	62-0259			Bind Hd Sheet Met Screw #6x1/4
52	1	41-0986			Pressure Release Tube No.1
53	1	41-0672			End Cap
54	1	41-2757			Lock Nut
55	1	61-8103	1	1	O-ring #905
56	2	41-3753			Oil Level Sight
57	1	61-8100A			Gas Ballast Valve Adapter
58	1	61-8101A			Gas Ballast Connector
59	1	41-1734			Drain Valve
60	2	61-2231	1	1	O-Ring Tetr. #127
61	2	61-2228A			Cover, Oil Window
62	4	61-2232			Flat Hd Screw #8-32x1/2
		1-99-5282	1	1	Sealant, 6 cc
		1401D	1	1	Mechanical Seal Option**

A*: MAJOR REPAIR KIT CAT # 1380K-04
B*: MINOR REPAIR KIT CAT # 1380K-03 .

** 1401D is mechanical seal kit includes mechanical seal, gasket and 3 screws

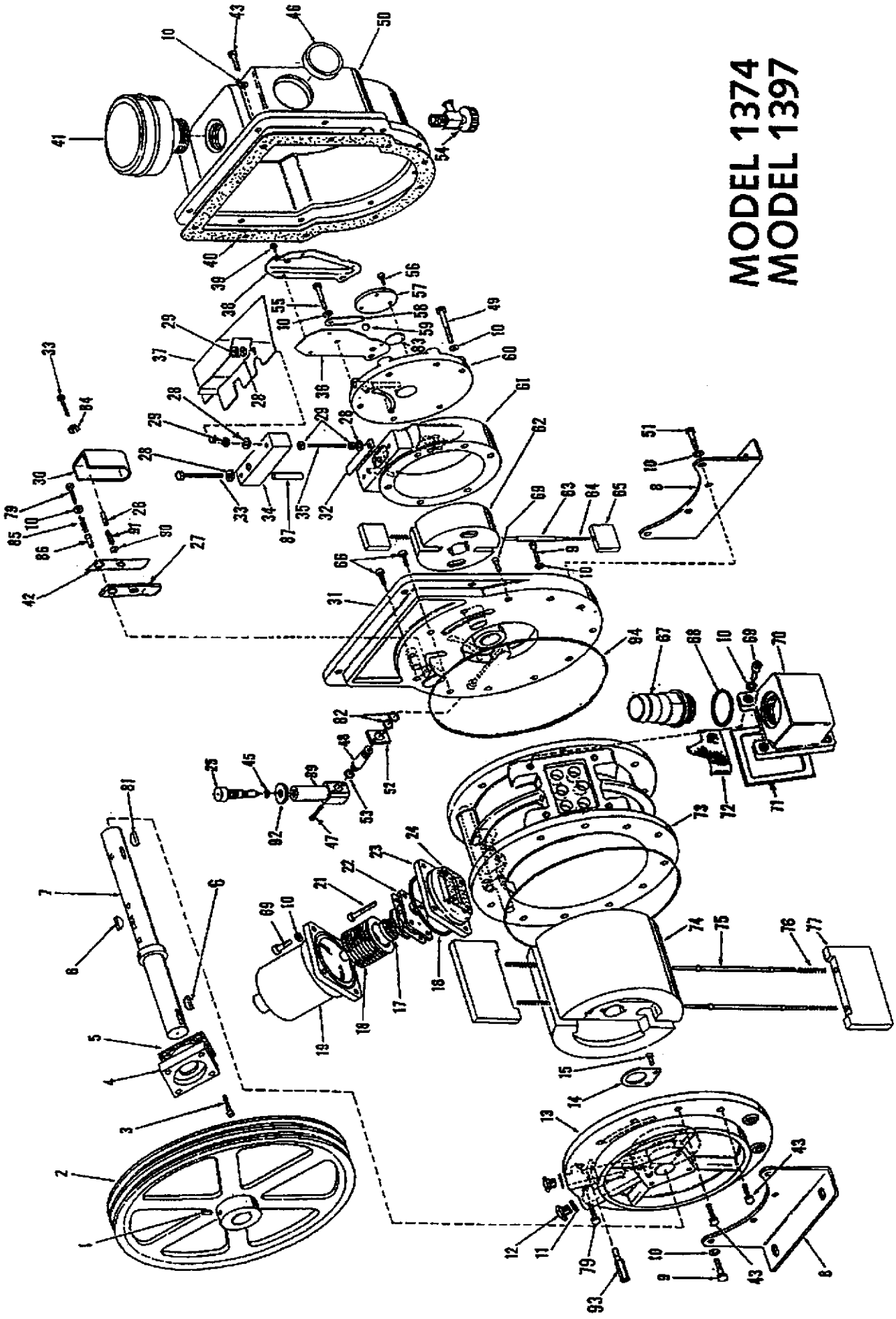
MODEL 1374
MODEL 1397

PARTS LIST
MODEL 1397/1374 VACUUM PUMP

ITEM	QUAN	PC. NO.'	A*	B*	DESCRIPTION
1	1	2-01-9306			Set Screw 5/16-18x3/8
2	1	41-1492			Pulley incl. Item 1
3	4	2-01-6116			Soc Hd Screw 1/4-20x1
4	1	61-5074	1	1	Shaft Lip Seal Assy.
5	1	41-1494			Seal Gasket
6	2	41-1490	2	2	Woodruff Key
7	1	41-1484			Shaft & Collar
8	2	41-1486	2	2	Leg
9	10	2-01-6324			Hex Hd. Screw 5/16-18x1-1/2
10	51	41-2363			Steel Washer
11	3	41-1137			Plug Washer
12	2	41-1136			Plug
13	1	41-1466			Large End Plate
14	1	41-0055			Spacer
15	2	2-00-2704			Fil Hd Screw 10-32x1/4
16	1	41-1507	1	1	O-Ring #235
17	1	41-1504			Valve Spring Unit
18	1	41-1505			Valve Bellow Unit
19	1	41-2492			Cover for Conversion Valve
21	4	2-01—6320			Soc Hd Screw5/16-18x1-1/4
22	1	41-1506			Valve Inner Plate
23	1	41-1503	1	1	Valve Plate
24	1	41-1508	1	1	Valve Gasket
25	1	41-1736			Gas Balast Valve incl. Item 45
26	1	41-2258			Hardened Sleeve 1/4 Size
27	1	61-8538A	1	1	Valve Backer (STEEL)
28	8	2-61-0000			Steel Washer 3/16 Bolt Size
29	4	2-31- 0112			Hex Steel Nut 1/4-20x7/16
30	1	41-2253			Discharge Valve Cover
31	1	41-1465			Center Plate
32	1	41-2161	1	1	Exhaust Valve
33	2	2-01-0120			Hex Hd Screw 1/4-20x1-1/4
34	1	41-2164			Cover
35	1	2-01-8132			Headless Screw 1/4-20x2
36	1	41-1005			Pressure Release Tube Part 2
37	1	41-1461			Deflector
38	1	41-0986			Pressure Release Tube Part 1
39	3	62-0259			Bd Hd Screw #6x1/4
40	1	41-1496	1	1	Oil Case Gasket
41	1	41-1501			Dust Cap
42	1	61-8539A	1	1	Valve Flapper (SPRING STEEL)
43	15	2-01-0316			Hex Hd Screw 5/16-18x1
45	1	41-1742	1	1	O-ring #011 Viton
46	2	41-3753			Oil Sight
47	2	61-8362			Soc Hd Screw 8-32x1
48	1	61-8101A			Connector for GB Valve
49	5	62-0222			Soc Hd Screw 5/16-18x2-3/4
50	1	41-1482			Oil Case Assy. incl Item 54 & (2) Items 46
51	4	2-01-0328			Hex Hd Screw 5/16-18x1-3/4
52	1	61-8102A			Flange For GB Valve
53	1	61-8103	1	1	O-Ring #905 Viton
54	1	41-1734			Drain Valve
55	1	2-01-0344			Hex Hd Screw 5/16-18x2-3/4
56	3	2-00-2706			Flat Hd Screw 10-32x3/8
57	1	41-0672			Shaft End Cap
58	1	41-0992	1	1	Pressure Relief Valve
59	1	4-40-1200	1	1	Steel Ball 3/8 Dia
60	1	41-1500			Small End Plate
61	1	41-1497			Exhaust Ring
62	1	41-1499			Exhaust Rotor
63	1	41-0696	1	1	Small Spring Holder
64	2	41-1304	2	2	Small Vane Spring
65	2	41-1487	2		Small Vane Metal
66	2	2-01-6316			Soc Hd Screw 5/16-18x1
67	1	61-8469A			Intake Nipple
68	1	61-8475	1	1	O-Ring #224 Viton
69	9	2-01-6314			Soc Hd Screw 5/16-18x7/8
70	1	61-8693			Intake Chamber
71	1	41-1495	1	1	Intake Chamber Gasket
72	1	41-0937	1	1	Screen Filter
73	1	61-8691			Large Ring
74	1	41-1478			Large Rotor
75	2	41-1489	2	2	Large Spring Holder
76	4	41-1488	4	4	Large Vane Spring
77	2	41-1477	2		Large Vane Metal
79	2	2-01-0320			Hex Hd Screw 5/16-18x1-1/4
81	1	41-1516	1	1	Key for Small Rotor
82	4	41-1056	4	4	Aluminum Washer
83	1	41-1469	1	1	Spacer Disk
84	1	2-63-0193			Split Lock Washer 1/4
85	1	41-2256			Coil Spring
86	1	41-2257			Hardened Sleeve 5/16 Size
87	1	41-2553	1	1	Spacer
89	1	61-8100A			GB Valve Adapter
90	1	2-69-7007			SS Washer 11/32x11/16x1/16
91	1	41-2259			Coil Spring
92	1	41-2757			Lock Nut
93	1	41-2165			Guard Stud
94	1	61-8712	1	1	O-Ring #372 Viton
		1-99-5282	1	1	Sealant, 6 cc
		1401F	1	1	Mechanical Seal option**

A*: MAJOR REPAIR KIT CAT # 1397K-08
B*: MINOR REPAIR KIT CAT # 1397K-07

** 1401F is mechanical seal includes mechanical seal, gasket and 4 screws

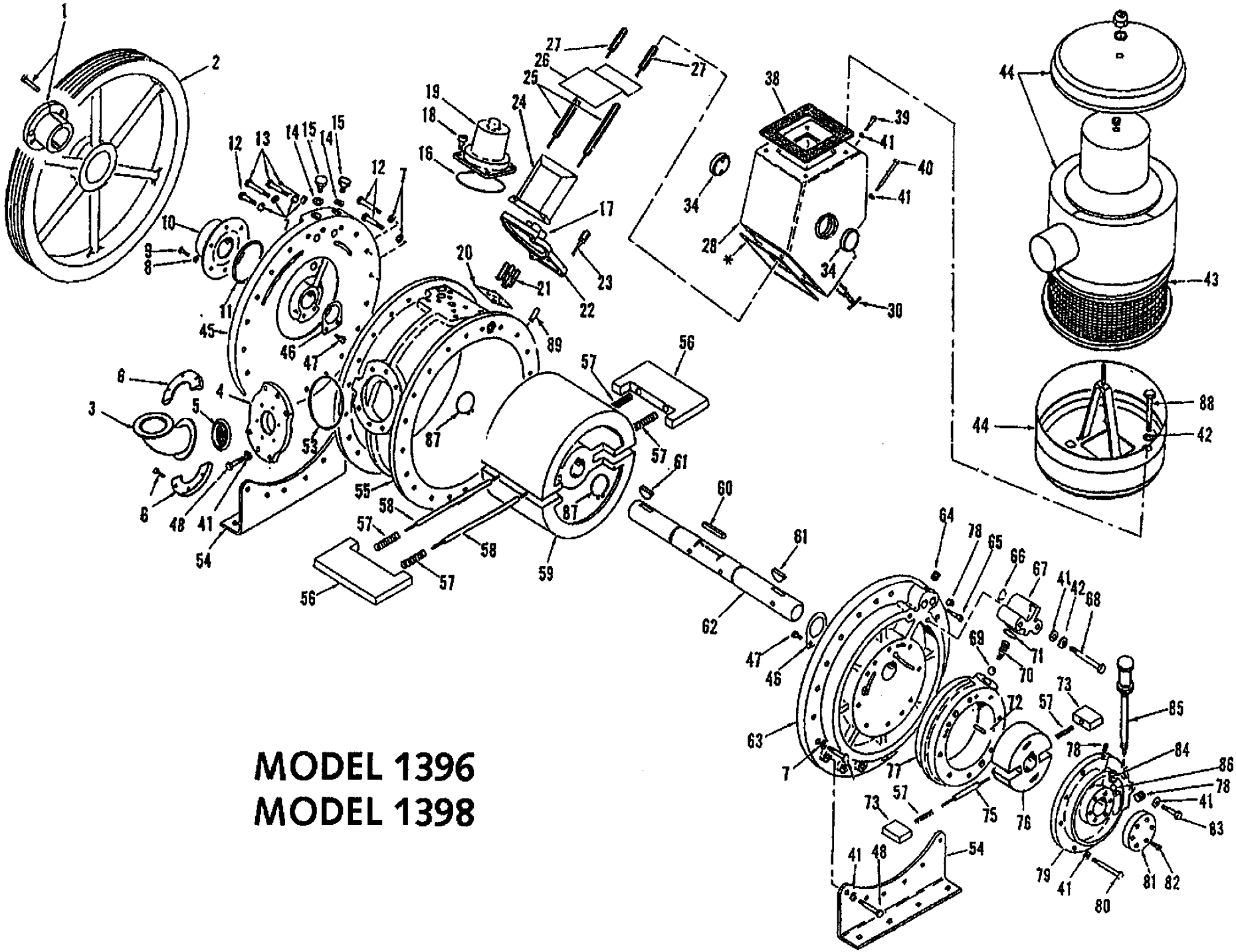

MODEL 1396
MODEL 1398

PARTS LIST
MODEL 1396 VACUUM PUMP
MODEL 1398 VACUUM PUMP

ITEM	QUAN	PC. NO.	DESCRIPTION
1	1	61-8487	Pulley Bushing 1-1/2 Bore
2	1	61-8486	Pulley incl. Item 1
3	1	61-8610	72 deg Elbow NW50
4	1	61-8611	Intake Adapter
5	1	61-8613	Centering Ring w/screen NW50
6	1	61-8612	Bulkhead Clamp
7	43	2-61-0571	Steel Washer 3/8
8	6	2-61-0000	Seel Washer 3/16 Bolt Size
9	6	2-01-0110	Hex Hd. Screw 1/4-20 x 5/8
10	1	41-2491	Seal
11	1	41-2515	O-Ring, Buna #237
12	42	2-01-0520	Hex Hd Screw 3/8-16 x 1-1/4
13	3	2-01-0532	Hex Hd Screw 3/8-16 x 2
14	4	41-1137	Washer
15	2	41-1136	Plug
16	1	41-1507	O-Ring #235
17	4	41-2485	Spring Retainer
18	4	2-01-6312	Soc Hd Screw 5/16-18 x 3/4
19	1	41-2492	Conversion Valver Cover
20	1	41-2567	Valve
21	4	41-2507	Spring for Exhaust Valve
22	1	41-2399	Valve Cover
23	2	41-2509	Long Extension Rod
24	1	41-2486	Deflector
25	2	41-2483	Connector Rod
26	1	41-2493	Baffle Plate
27	2	41-2484	Extension Rod
28	1	41-2395	Oil Case
30	1	41-1722	Draincock
34	2	41-3753	Oil Sight
38	1	41-2517	Gasket
39	2	2-01-0320	Hex Hd Screw 5/16-18 x 1-1/4
40	2	2-01-0356	Hex Hd Screw 5/16-18 x 3-1/2
41	32	41-2363	Washer
42	6	2-61-3100	Washer 1/4
43	1	41-1726	Replacement Filter Element
44	1	41-1746	Filter Element Incl. Item 43
45	1	41-2411	Large End Plate
46	2	41-2397	Spacer
47	4	2-00-2704	Fil Hd Screw 10-32 x 1/4
48	18	2-01-0316	Hex Hd Screw 5/16-18 x 1
53	1	41-2482	O-Ring #349
54	2	41-2494	Leg
55	1	41-2386	Large Ring
56	2	41-2406	Large Vane, Metal
57	6	41-2952	Vane Spring
58	2	41-2472	Spring Holder for Large Vane
59	1	41-2404	Large Rotor
60	1	41-2473	Key
61	2	41-2514	Woodruff Key
62	1	41-2403	Shaftr
63	1	41-2410	Center Plate
64	1	61-8510	Pipe Plug 1/4 NPT
65	1	2-01-6532	Soc Hd Screw 3/8-16 x 2
66	1	41-2487	O-Ring #210
67	1	41-2396	Exhaust By-pass
68	2	2-01-0344	Hex Hd Screw 5/16-18 x 2-3/4
69	1	4-40-2401	Ball Valve 3/4 dia
70	1	41-2506	Cone Spring
71	1	41-2488	O-Ring #216
72	2	4-21-3901	Dovel Pin 7/16 dia x 3
73	2	41-2392	Small Vane, Metal
75	1	41-2471	Spring Holder for Smaal Vane
76	1	41-2405	Small Rotor
77	1	41-2390	Small Ring
78	3	41-5405	Pipe Plug
79	1	41-2409	Small End Plate
80	7	2-01-0352	Hex Hd Screw 5/16-18 x 3-1/4
81	1	41-2470	Shaft End Cap
82	6	2-01-6112	Soc Hd Screw 1/4-20 x 3/4
83	1	2-01-0364	Hex Hd Screw 5/16-18 x 4
84	1	41-2521	Ball Check Plug
85	1	41-2497	Vented Exhaust Valve
86	1	4-40-0800	Steel Ball 1/4
87	2	41-2402	Retaining Ring
88	4	2-01-0312	Hex Hd Screw 5/16-18 x 3/4
89	1	41-3063	Orifice
*			Sealant
**	1	70-1003	Hinged Clamp NW50
**	1	70-1007	Centering Ring Assy. NW50
**	1	70-1071	Hose Adapter NW 50

** Parts supplied with the Pump but not shown

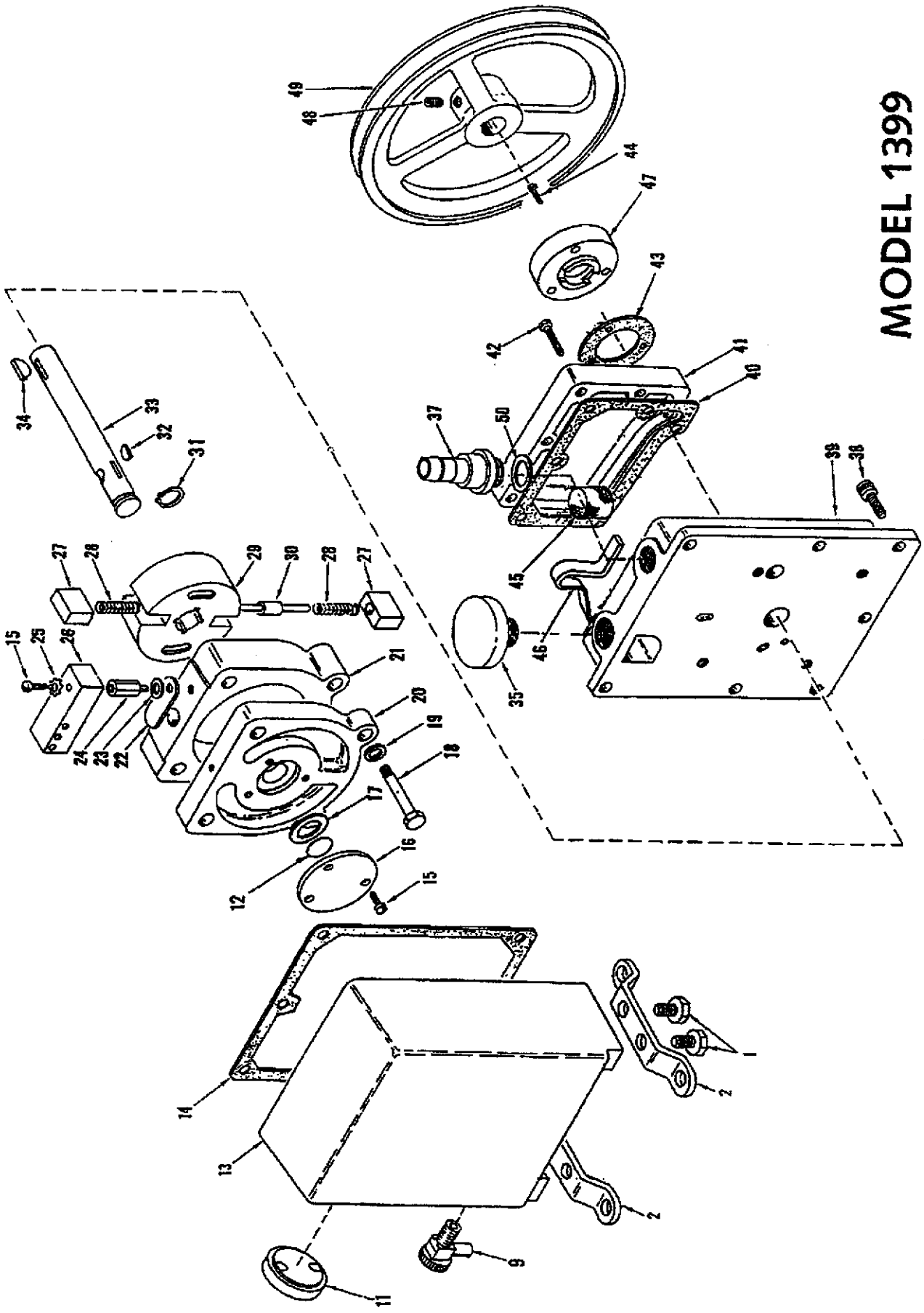
MODEL 1399

PARTS LIST
MODEL 1399 VACUUM PUMP

ITEM	QUAN	A*	B*	PC. NO.	DESCRIPTION
1	4			2-01-0308	Hex Hd Screw 5/16 - 18x1/2
2	2			41-1049	Leg
9	1			41-1734	Drain Valve
11	1			41-3753	Oil Sight
12	1	1	1	41-1766	Thrust Disk
13	1			41-2378	Oil Case Assy. incl items 1,2,9,11
14	1	1	1	41-1052	Oil Case Gasket
15	4	1	1	2-00-2706	Fil Hd Screw 10-32x3/8
16	1			41-0672	SHAFT END CAP
17	1	1	1	41-1285	Steel Washer
18	4			2-01-0332	Hex Hd Screw 5/16 - 18x2
19	4			41-2363	Washer
20	1			41-2373	End Plate
21	1			41-1042	Inner Ring
22	1	1	1	41-1239	Exhaust Valve
23	2	1	1	2-71-0040	Brass Washer #10
24	1	1	1	41-2370	Valve Cover Stud
25	1	1	1	2-65-0000	Lock Washer #10 Ext.
26	1			41-2368	Valve Cover
27	2	2		41-1059	Vane
28	2	2	2	41-2304	Spring
29	1			41-1040	Rotor
30	1	1	1	41-1063	Spring Holder
31	1	1	1	41-0974	Retaining Ring
32	1	1	1	41-0613	Woodruff Key
33	1			41-2374	Shaft
34	1	1	1	41-0624	Pulley Key
35	1			41-1345	Dust Cap
37	1			41-0920	Intake Nipple
38	7			2-01-6112	Soc Hd Screw 1/4-20x3/4
39	1			41-2367	Intake Chamber
40	1	1	1	41-2375	Cover Gasket
41	1			41-2369	Intake Chamber Cover
42	6			2-00-0716	Hex Hd Screw 10-32x1
43	1			41-0643	Seal Gasket
44	3			2-00-6712	Soc Hd Screw 10-32x3/4
45	1			41-0306	Air Filter
46	1			41-2371	Air Filter Bracket
47	1	1	1	1401E	Shaft Seal incl. item 43 & (3) 44 **
48	1			2-01-9306	Soc Hd Set Screw 5/16-18x3/8
49	1			41-2192	Pulley incl. item 48
50	1			41-1137	Aluminum Washer
		1	1	1-99-5282	Sealant, 6 cc

A*: MAJOR REPAIR KIT #1399K-04
B*: MINOR REPAIR KIT #1399K-03

** 1401E is mechanical seal which fits all model 1399 serial numbers. There is a lipseal seal on S/N 25773 and above. It is available as a kit. part no. 1401E-01

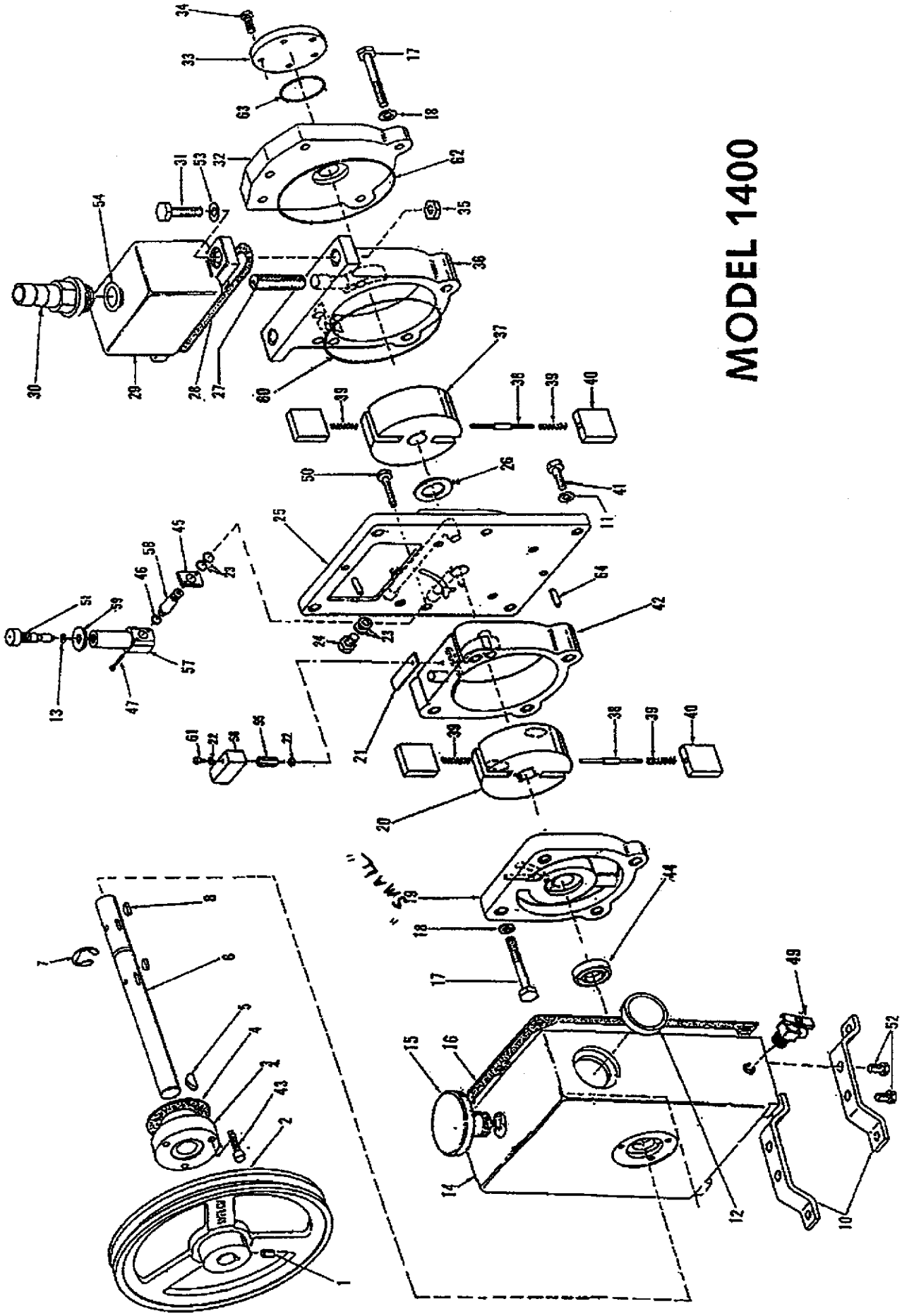
MODEL 1400

PARTS LIST
MODEL 1400 VACUUM PUMP

ITEM	QUAN	A*	B*	PC. NO.	DESCRIPTION
1	1			2-01-9306	Soc Hd Set Screw 5/16 - 18x3/8
2	1			41-2191	Pulley include. Set Screw , Item 1
3	1			41-3696	Shaft Seal
4	1			41-0643	Shaft Seal Gasket
5	1	1	1	41-0624	Pulley Key
6	1			41-1060	Shaft
7	1	1	1	41-1150	Retaining Ring
8	2	2	2	41-0613	Woodruff Key
10	2			41-1049	Leg
11	6			41-1138	Washer, Copper, 7/16 OD
12	1			41-3753	Oil Sight
13	1	1	1	41-1742	O-Ring #011
14	1			61-8540C	Oil Case*
15	1			41-1345	Dust Cap
16	1	1	1	41-1052	Oil Case Gasket
17	9			2-01-0332	Hex Hd Screw 5/16 - 18x2
18	9			41-2363	Washer
19	1			41-1045	Exhaust End Plate
20	1			41-1040	Exhaust Rotor
21	1	1	1	41-1239	Exhaust Valve
22	2	2	2	2-71-0040	Brass Washer #10
23	8			41-1056	Aluminum Washer
24	1			41-1039	Vented Exhaust Plug
25	1			61-8679	Center Plate
26	1			41-1285	Steel Washer
27	1	1	1	41-0890	Air Filter
28	1	1	1	41-0383	Gasket
29	1			41-1048	Intake Chamber**
30	1			61-8467A	Nipple
31	2			2-01-0524	Hex Hd Screw 3/8 - 16x1-1/2
32	1			61-8702	Intake End Plate
33	1			61-8673	End Cap
34	5			2-00-2706	Hex Hd Screw 10 - 32x3/8
35	2			2-31-2521	Hex Nut 3/8x16
36	1			61-8675	Intake Ring
37	1			41-1041	Intake Rotor
38	2	2	2	41-1063	Spring Holder
39	4	4	4	41-1304	Vane Spring
40	4	4		41-1059	Vane (Metal)
41	5			2-01-0112	Hex Hd Screw 1/4 - 20x3/4
42	1			41-1042	Exhaust Ring
43	3			2-00-6712	Soc Hd Screw 10-32x3/4
44	1	1	1	41-0578	Seal
45	1			61-8102A	Flange for G.B. Valve
46	1	1	1	61-8103	O-Ring, Viton
47	2			61-8362	Soc Hd Screw 8 - 32x1
49	1			41-1734	Drain Valve
50	1			2-01-0120	Hex Hd Screw 1/4 - 20x1-1/4
51	1			41-1736	Vented Exhaust Valve
52	4			2-01-0308	Hex Hd Screw 5/16 - 18x1/2
53	2			2-61-0571	Steel Washer .071 Thick x 3/8 ID
54	1			61-2159A	O-Ring, #116, Viton
55	1	1	1	41-1069	Baffle Stud
56	1			61-8347B	Exhaust Baffle
57	1			61-8100A	Valve Adapter
58	1			61-8101A	Connector
59	1			41-2757	Locknut
60	1	1	1	61-8665	O-Ring, M2.5x86, Viton
61	1			2-00-2704	Fil Hd Screw 10-32x1/4
62	1	1	1	61-9378	O-Ring, #152, Viton
63	1	1	1	66-0183	O-Ring, #120, Viton
64	2			61-9280A	Dowel Pin, 1/4
		1	1	1-99-5282	Sealant 6 cc
		1	1	1401E	Mechanical Seal Option***

* Oil Case Assembly PT #61-8540C includes Legs item 10, Oil Sight, item 12, oil case, item 14, Screws, Item 52 & Drain Valve, item 49.

** Intake Chamber Assembly PT #41-1048 includes intake chamber, item 29, nipple, Item 30 & O- ring, item 54.

A*: Major Repair Kit #1400K-04

B*: Minor Repair Kit #1400K-03

*** 1401E is mechanical seal kit, it includes mechanical seal, gasket, and 3 screws

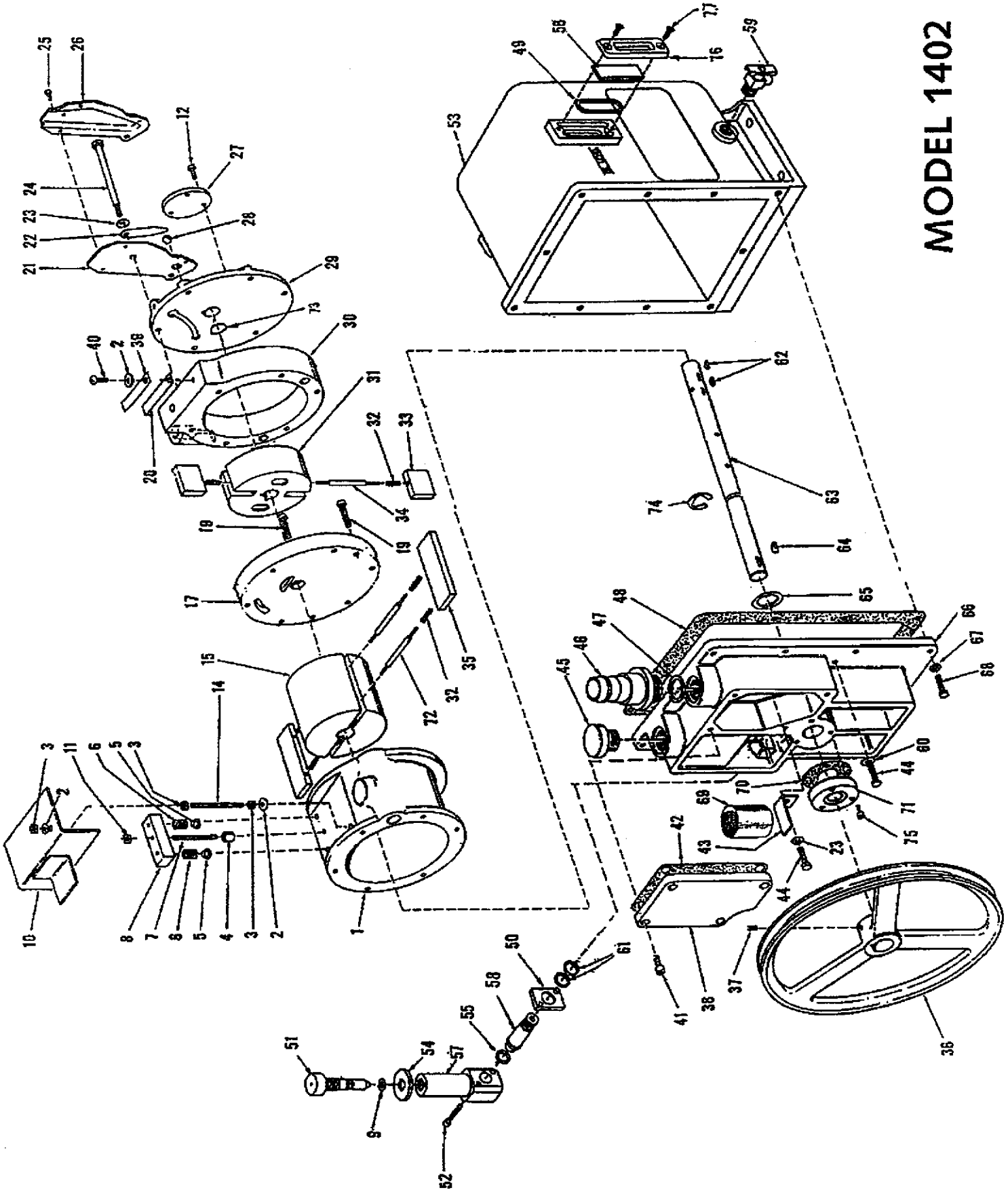
MODEL 1402

PARTS LIST
MODEL 1402 VACUUM PUMP

ITEM	QUAN	PC. NO.	A*	B*	DESCRIPTION
1	1	61-8113C			Intake Ring
2	3	2-61-0000			Steel Washer 3/16 size
3	3	2-31-0112			Hex. Steel Nut
4	1	41-2159	1	1	Valve Block Spacer
5	2	41-2157	2	2	Valve
6	2	41-2158	2	2	Valve Spring
7	1	2-01-8128			Headless Steel Setscrew
8	1	41-2156			Valve Block
9	1	41-1742	1	1	O-Ring #011
10	1	41-2160			Baffle Plate
11	1	2-36-9900			Nut, Lock 1/4-20
12	3	2-00-2706			Fil. Hd. Screw 10-32x3/8
14	1	41-2175			Headless Steel Setscrew
15	1	41-2092			Intake Rotor
17	1	61-8250C			Center Plate
19	2	2-01-6320			Socket Hd. Screw 5/16-18x1-1/4
20	1	41-2154	1	1	Lower Exhaust Valve
21	1	41-1005			Pressure Release Tube, Part 2
22	1	41-0992	1	1	Pressure Release Valve
23	6	41-2363			Washer
24	6	2-01-0356			Hex. Hd Screw 5/16-18x3-1/2
25	3	62-0259			Self Tap Screw #6x1/4 Type "A"
26	1	41-0986			Pressure Release Tube Part 1
27	1	41-0672			End Cap
28	1	4-40-1200	1	1	Steel Ball 3/8
29	1	41-2045			Small End Plate
30	1	61-8108D			Exhaust Ring
31	1	41-1518			Exhaust Rotor
32	6	41-1304	6	6	Vane Spring
33	2	41-1487	2		Small Vane
34	1	41-0696	1	1	Vane Spring Holder-Exhaust
35	2	41-0959	2		Large Vane
36	1	41-2074			Pulley inc. setscrew, Item 37
37	1	2-01-9306			Socket Head Set Screw
38	1	61-8671			Large End Plate Cover
39	1	41-2153	1	1	Upper Exhaust Valve
40	1	2-01-5106			Rd. Hd. Steel Screw 1/4-20x 3/8
41	4	2-01-6112			Socket Screw 1/4-20x3/4
42	1	41-0234	1	1	Intake Chamber Cover Gasket
43	1	41-0663			Air Filter Bracket
44	6	2-01-0316			Hex Head Cap Screw 5/16-18x1
45	1	41-0612			Dust Cap
46	1	61-8468A			Intake Nipple
47	1	61-9284A	1	1	O-ring, #214
48	1	41-0403	1	1	Oil Case Gasket
49	2	61-2231	2	2	O-ring Tetr #127
50	1	61-8102A			Flange For G.B. Valve
51	1	41-1736			Gas Ballast Valve
52	2	61-8362			Soc. Hd Screw 8-32x1
53	1	61-8101			Oil Case Assy, incl. Items 49,56,59,76 ,77
54	1	41-2757			Lock Nut
55	1	61-8103	1	1	O-ring
56	2	61-2229A			Window Glass
57	1	61-8100A			Gas Ballast Valve Adapter
58	1	61-8101A			Gas Ballast Valve Connector
59	1	41-1734			Drain Valve
60	6	61-8456A	6	6	Washer Copper 5/16
61	2	41-1056			Washer
62	2	41-0613	2	2	Woodruff Key
63	1	41-2093			Shaft
64	2	41-0624	2	2	Woodruff Key
65	1	41-0508	1	1	Thrust washer
66	1	61-8668			Large End Plate
67	10	2-63-0193			Split Lock Washer
68	10	2-01-0114			Hex Head Cap Screw 1/4-20x3/4
69	1	41-0660	1	1	Air Filter
70	1	41-0643			Seal Gasket
71	1	61-8378A			Shaft Lip Seal Assy.
72	2	41-1685	2	2	Spring Holder - Intake
73	3	41-1766	3	3	Thrust Disc
74	1	4-06-0754	1	1	Truarc Ring
75	3	2-00-6712			Soc Hd Screw 10-32x3/4
76	2	61-2228A			Cover, Oil Window
77	4	61-2232			Fl Hd Screw 8-32x1/2
		1-99-5282	1	1	Sealant, 6 cc
		1401D	1	1	Mechanical Seal option**

A*: MAJOR REPAIR KIT CAT # 1402K-06

B*: MINOR REPAIR KIT CAT # 1402K-05

** 1401D is mechanical seal kit includes mechanical seal, gasket and 3 screws

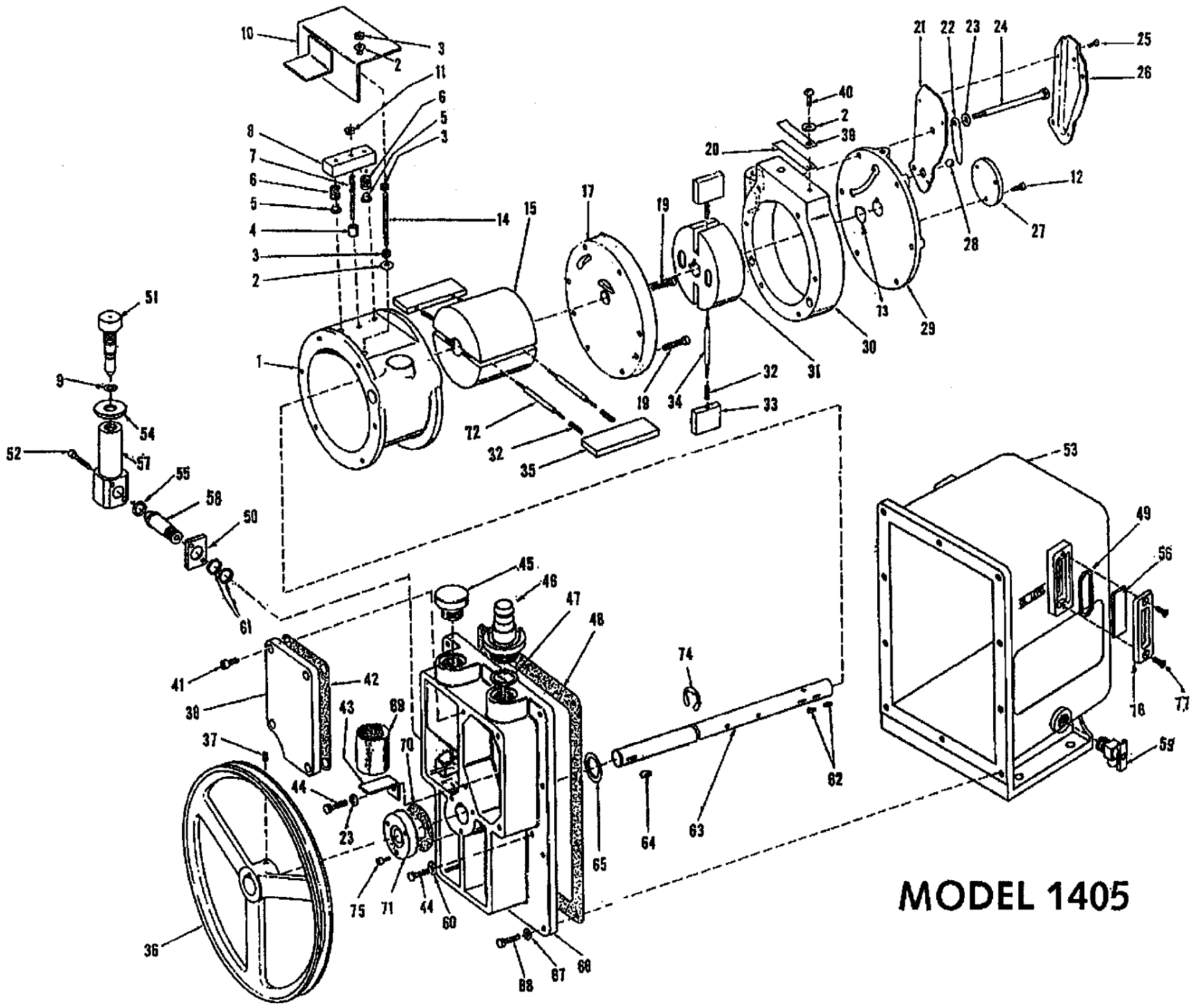
MODEL 1405

PARTS LIST
MODEL 1405 VACUUM PUMP

ITEM	QUAN	PC. NO.	A*	B*	DESCRIPTION
1	1	61-8651			Intake Ring
2	3	2-61-0000			Steel Washer 3/16 size
3	3	2-31-0112			Hex. Steel Nut
4	1	41-2159	1	1	Valve Block Spacer
5	2	41-2157	2	2	Valve
6	2	41-2158	2	2	Valve Spring
7	1	2-01-8128			Headless Steel Setscrew
8	1	41-2156			Valve Block
9	1	41-1742	1	1	O-Ring #011
10	1	41-2160			Baffle Plate
11	1	2-36-9900			Nut, Lock 1/4-20
12	3	2-00-2706			Fil. Hd. Screw 10-32x3/8
14	1	41-2175			Headless Steel Setscrew
15	1	41-2092			Intake Rotor
17	1	61-8250C			Center Plate
19	2	2-01-6320			Socket Hd. Screw 5/16-18x1-1/4
20	1	41-2154	1	1	Lower Exhaust Valve
21	1	41-1005			Pressure Release Tube, Part 2
22	1	41-0992	1	1	Pressure Release Valve
23	6	41-2363			Washer
24	6	2-01-0356			Hex. Hd Screw 5/16-18x3-1/2
25	3	62-0259			Self Tap Screw #6x1/4 Type "A"
26	1	41-0986			Pressure Release Tube Part 1
27	1	41-0672			End Cap
28	1	4-40-1200	1	1	Steel Ball 3/8
29	1	41-2045			Small End Plate
30	1	61-8108D			Exhaust Ring
31	1	41-1518			Exhaust Rotor
32	6	41-1304	6	6	Vane Spring
33	2	41-1487	2		Small Vane
34	1	41-0696	1	1	Vane Spring Holder-Exhaust
35	2	41-0959	2		Large Vane
36	1	41-2074			Pulley inc. setscrew, Item 37
37	1	2-01-9306			Socket Head Set Screw
38	1	61-8671			Large End Plate Cover
39	1	41-2153	1	1	Upper Exhaust Valve
40	1	2-01-5106			Rd. Hd. Steel Screw 1/4-20x 3/8
41	4	2-01-6112			Socket Screw 1/4-20x3/4
42	1	41-0234	1	1	Intake Chamber Cover Gasket
43	1	41-0663			Air Filter Bracket
44	6	2-01-0316			Hex Head Cap Screw 5/16-18x1
45	1	41-0612			Dust Cap
46	1	61-8641			Intake Nipple
47	1	61-9284A	1	1	O-ring, #214
48	1	41-0403	1	1	Oil Case Gasket
49	2	61-2231	2	2	O-ring Tetr #127
50	1	61-8102A			Flange For G.B. Valve
51	1	41-1736			Gas Ballast Valve
52	2	61-8362			Soc. Hd Screw 8-32x1
53	1	61-8101			Oil Case Assy, incl. Items 49,56,59,76 ,77
54	1	41-2757			Lock Nut
55	1	61-8103	1	1	O-ring
56	2	61-2229A			Window Glass
57	1	61-8100A			Gas Ballast Valve Adapter
58	1	61-8101A			Gas Ballast Valve Connector
59	1	41-1734			Drain Valve
60	6	61-8456A	6	6	Washer Copper 5/16
61	2	41-1056			Washer
62	2	41-0613	2	2	Woodruff Key
63	1	41-2093			Shaft
64	2	41-0624	2	2	Woodruff Key
65	1	41-0508	1	1	Thrust washer
66	1	61-8668			Large End Plate
67	10	2-63-0193			Split Lock Washer
68	10	2-01-0114			Hex Head Cap Screw 1/4-20x3/4
69	1	41-0660	1	1	Air Filter
70	1	41-0643			Seal Gasket
71	1	61-8378A			Shaft Lip Seal Assy.
72	2	41-1685	2	2	Spring Holder - Intake
73	3	41-1766	3	3	Thrust Disc
74	1	4-06-0754	1	1	Truarc Ring
75	3	2-00-6712			Soc Hd Screw 10-32x3/4
76	2	61-2228A			Cover, Oil Window
77	4	61-2232			Fl Hd Screw 8-32x1/2
		1-99-5282	1	1	Sealant, 6 cc
		1401D	1	1	Mechanical Seal option**

A*: MAJOR REPAIR KIT CAT # 1402K-06

B*: MINOR REPAIR KIT CAT # 1402K-05

** 1401D is mechanical seal kit includes mechanical seal, gasket and 3 screws