ATP SERIES

LES POMPES TURBOMOLECULAIRES

TURBOMOLUECULAR PUMPS

Manuel de l'utilisat

User's manual

adixen
by Alcatel Vacuum Technology

Realization / Publication : Alcatel Vacuum Technology France - Part Number : 102710 – Ed 11– March 2007

Alcatel Vacuum Technology, as part of the Alcatel-Lucent Group, has been supplying vacuum pumps, helium and hydrogen leak detection systems, plasma sensors, vacuum measurement for several years.
Thanks to its complete range of products, the company has become an essential player in multiple applications : instrumentation, Research & Developement, industry and semiconductors.

Alcatel Vacuum Technology has launched Adixen, its new brand name, in recognition of the company's international standing in vacuum position.
With both ISO 9001 and 14001 certifications, the French company is an acknowlegded expert in service and support, and Adixen products have the highest quality and environmental standards.

With 45 years of experience, AVT today has a worldwide presence, through its international network that includes a whole host of experienced subsidiaries, distributors and agents.
The first step was the founding of Alcatel Vacuum Products (Hingham- MA) in the United States, thirty years ago, reinforced today by 2 others US subsidiaries in Fremont (CA) and Tempe (AZ).
In Europe, AVTF-France headquarters and its subsidiaries, Alcatel Hochvakuumtechnik (Germany), Alcatel Vacuum Technology UK (Scotland), Alcatel Vacuum Technology Benelux (Netherlands), Alcatel Vacuum Systems (Italy) and more recently Adixen Sensistor AB in Sueden (in 2007) form the foundation for the European partner network.
In Asia, our presence started in 1993 with Alcatel Vacuum Technology (Japan), and has been strengthened with Alcatel Vacuum Technology Korea (in 1995), Alcatel Vacuum Technology Taiwan (in 2001), Alcatel Vacuum Technology Singapore, Alcatel Vacuum Technology Shanghai (China) (in 2004)
This organization is rounded off by more than 40 represensatives based in a variety of continents.

Thus, whatever the circumstances, the users of Adixen products can always rely on quick support of our specialists in Vacuum Technology.

GB 02834 – Ed 04 – March- 2007

ATP Series Turbomolecular Pumps

Welcome

Dear Customer,

You have just purchased an Alcatel turbomolecular pump. We would like to thank you and are proud to count you as one of our customers.

This product has benefited from Alcatel's many years of experience in the field of turbomolecular pump design.

In order to ensure the best possible performance of the equipment and your complete satisfaction in using it, we advise you to read this manual carefully before any intervention on your pump and to pay particular attention to the equipment installation and start-up section.

APPLICATIONS:

- INDUSTRY
Cryogenics, Freeze drying, Vacuum drying, etc.

- INSTRUMENTATION
Mass spectrometry, surface analysis, etc.

- RESEARCH AND DEVELOPMENT
Ultra-high vacuum systems, Particle accelerators, etc.

- VARIOUS SEMICONDUCTOR PROCESSES

ADVANTAGES:

The reliable and sturdy design of ATP pumps ensures performance suited to the fields of application concerned.

GB 00393 - Edition 10 - March 00

MANUAL REFERENCE: **102 710**
EDITION: **11 - April 2007**

Contents

ATP User's Manual

Introduction

GB 00394 - Edition 10 - March 00

Contents

ATP User's Manual

Start-up

GB 00394 - Edition 10 - March 00

Contents

ATP User's Manual

Operation

Maintenance

GB 00394 - Edition 10 - March 00

Contents

ATP User's Manual

* These chapters are included into the ball bearing replacement manual delivered with the specific tool.

GB 00394 - Edition 10 - March 00

Chapter A

ATP User's Manual

Introduction

G 00396 - Edition 09 - February 99

Introduction to the ATP range and its associated ACT controllers

ATP turbomolecular pumps

5 turbomolecular pump models from 80 to 900 l/s

Main characteristics

- Ceramic ball bearings lubricated with grease;
- Adjustable rotation speed between 6000 and 27000 rpm;
- Natural convection, air or water cooling;
- "C" version for corrosive application with nitrogen purge;
- "HPC" high pressure version for semiconductor applications.

ACT Controllers

3 controller models type ACT

The range of **ACT controllers** offers flexible use and interfacing:

- Alphanumeric display;
- Membran keyboard;
- Monitoring of testing and troubleshooting parameters;
- Dry contact interface for status signals;
- Optocoupled control inputs;
- RS 232/485 serial links;
- Operation at all voltages between 85 and 264 V, 50/60 Hz.

GB 00397 - Edition 02 - February 99

Introduction to the ATP range and its associated ACT controllers

The different products available

The pumps		ATP 80 ATP 80 C	ATP 100 ATP 100 C	ATP 150 ATP 150 C	ATP 400 ATP 400 C	ATP 900 ATP 900 C
Intake flange		DN 63 ISO-K DN 63 CF-F	DN 100 ISO-K DN 100 CF-F	DN 100 ISO-K DN 100 CF-F	DN 160 ISO-K DN 160 CF-F	DN 200 ISO-K DN 200 CF-F
Cooling type	natural convection	x	x			
	air	x	x	x	x	x
	water	x	x	x	x	x

The pumps	ATP 400 HPC	ATP 900 HPC
Intake flange	DN 100 ISO-K DN 160 ISO-K	DN 200 ISO-K DN 200 CF-F
Water cooling	x	x

The controllers	ACT 200 T	ACT 600 T	ACT 1000 T
Cable length	1 m / 1,5 m 3.5 m / 5 m 10 m / 20 m	1 m / 1,5 m 3.5 m / 5 m 10 m / 15 m / 20 m	3.5 m / 5 m 10 m
Electronic boards to be inserted in a rack	x	x	

GB 00397 - Edition 02 - February 99

Turbomolecular pump operating principle

Functional diagram

In molecular operation, the gas molecules of the vacuum system arrive at the pump intake. They are trapped between the rotating disks of the rotor and the stationary disks of the stator and carried to the exhaust of the pump.

The ceramic ball bearings lubricated with grease enable the pump to be fitted in any position.

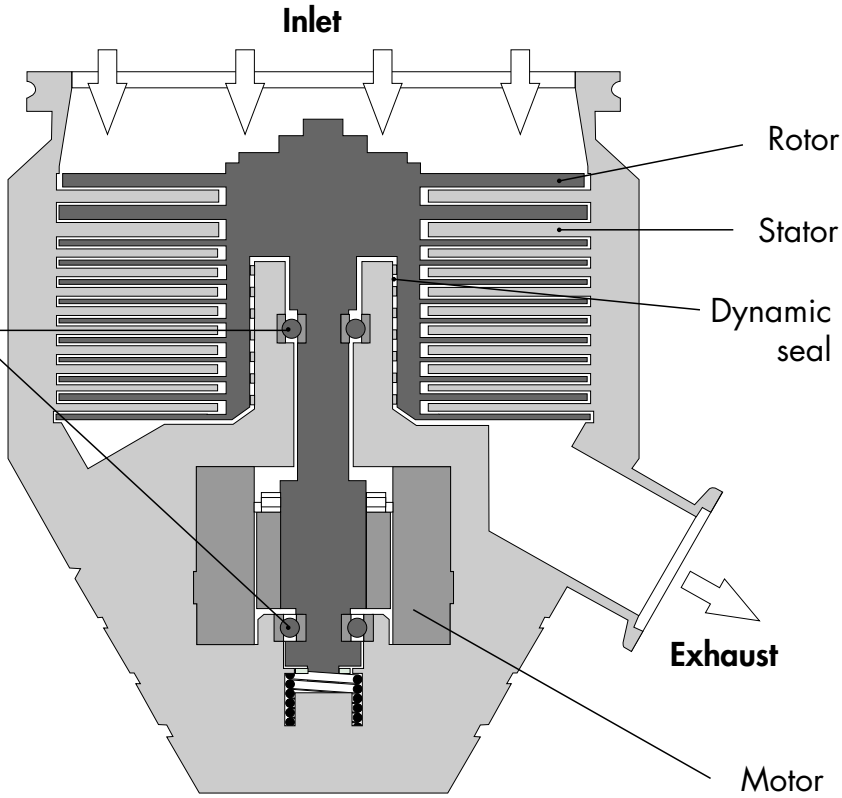

The turbomolecular pump in an installation

At the turbomolecular pump exhaust, the gases are evacuated to the atmosphere by a primary pump.
Since the ATP compression rate is set by the design, the ATP limit pressure is given by that of the primary pump used.

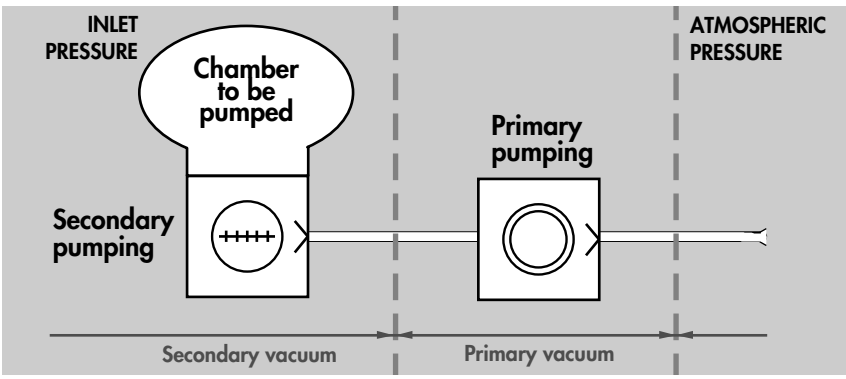

GB 00398 - Edition 01 - March 97

The different versions: Standard, "C" Corrosive, etc.

Standard Version
Pumping of clean, non-corrosive gases

As for the entire range, the pump rotation speed is adjustable, making it possible to produce the optimum pumping characteristics for the customer's application. There are two different types of speed:
- **the nominal speed** which corresponds to the maximum rotation speed of the pump, or 27000 rpm;
- **the reduced speed**, or STANDBY speed, adjustable between 6000 and 27000 rpm.

"C" Version
Corrosive applications

The **inverted dynamic seal** creates a high compression rate between the bearings and the pump exhaust and thus minimizes the quantity of corrosive gases in contact with the bearings.

When used with **a gas purge** for high flow rate applications, the dynamic seal can, on its own, provide excellent protection for ultravacuum applications.

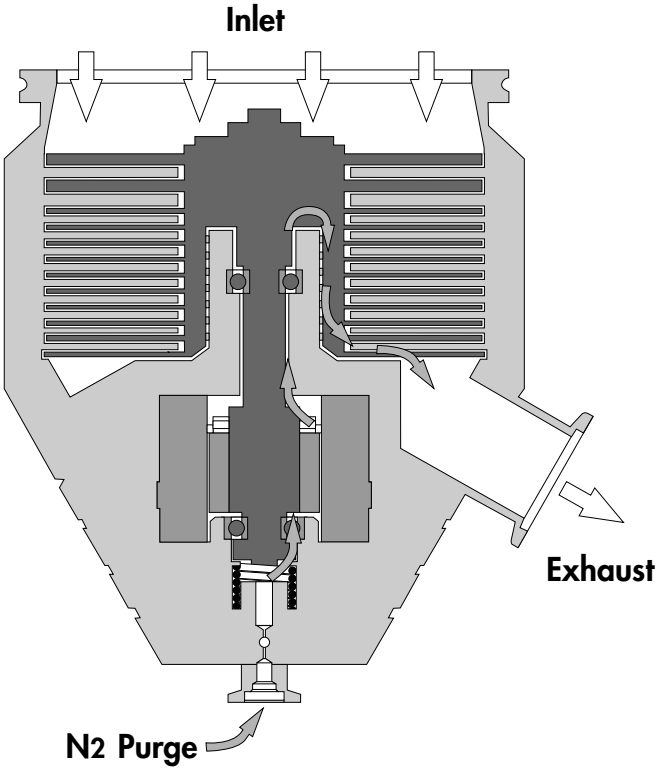

GB 00399 - Edition 01 - April 97

The different versions: "HPC" High Pressure Corrosive

"HPC" Version

Corrosive version for semiconductor applications

These pumps are specially designed for high flow rate applications in semiconductor applications. They provide:
- increased bearing protection;
- effective bearing protection when the purge is stopped during equipment calibration;
- a reduction in the purge gas flow rate;
- a long bearing service life in the presence of corrosive gases.

The pumps can be heated by the water circuit to prevent condensation of the process gases (water circuit temperature ≤ 65°C).

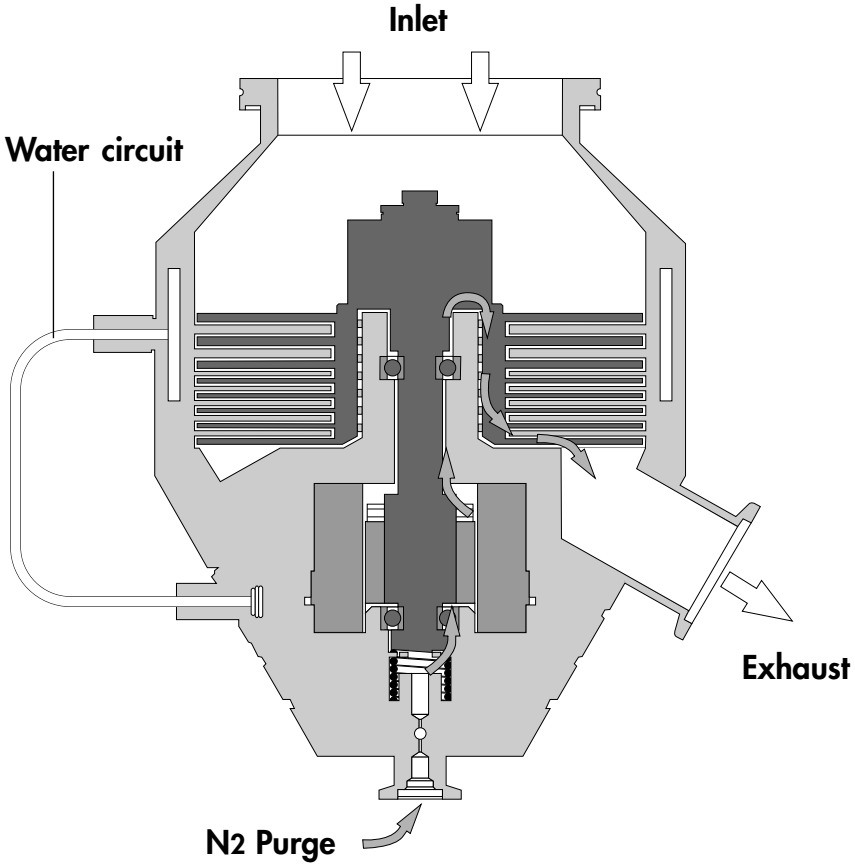

GB 00399 - Edition 01 - April 97

ACT controllers control modes

Local mode control

The front panel of the unit comprises:

Parameter selection and configuration keys

Manual control keys

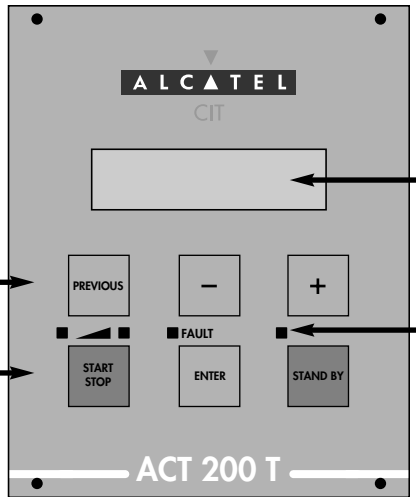

Parameter and message LCD display

Pump status indicator lights

Remote controls

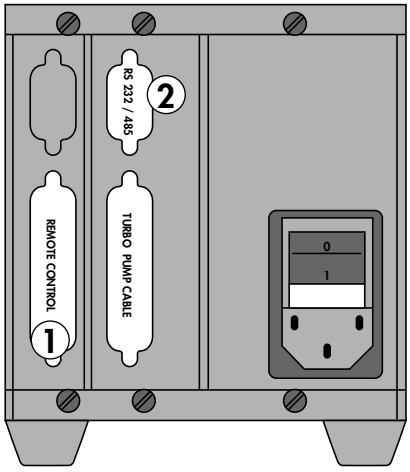

① The remote control

The remote control with the **REMOTE CONTROL** connector is used:

- for the remote control of the START, STOP, STANDBY functions;
- to replicate the monitoring parameters available in the form of dry contacts.

② RS 232 serial link

The RS232 serial link is used to control and monitor the pump **using a computer**.

② RS 485 serial link

The RS485 serial link allows many pump installation in a **network**.

The wiring characteristics are given on ***B 110***.

GB 00400 - Edition 02 - February 99

ACT controllers control modes

The ACT 600 T and ACT 1000 T controllers are 1/2 rack units

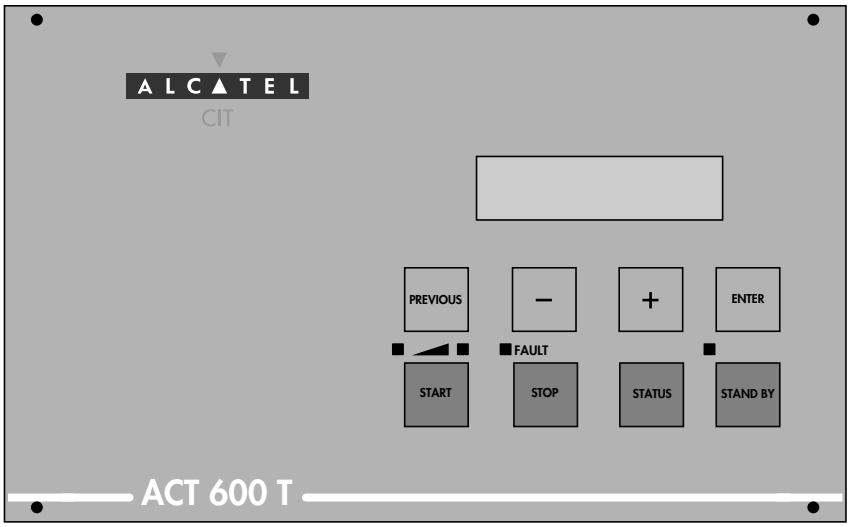

GB 00400 - Edition 02 - February 99

Accessories

Pump accessories

Screen filter

This filter protects the pump against solid particles. Mesh size 6 mm.

Filter P/N	Inlet flange			
	DN 63	DN 100	DN 160	DN 200
ISO-K	**063000**	**056844**	**056942**	**063158**
CF-F	**063115**	**056845**	**056928**	**063159**

Compact filter

This filter stops particles ≥ 20 microns and is used in the event of high densities of dust or risks of implosion when pumping tubes or lamps.

Filter P/N	Inlet flange			
	DN 63	DN 100	DN 160	DN 200
ISO-K	**063214**	**063215**	**063216**	**062911**

Bake-out collar

This accelerates degassing and reduces the pressure lowering times.

P/N	Pump type				
	ATP 80	ATP 100	ATP 150	ATP 400	ATP 900
200/240V 50/60Hz	**056934**	**056934**	**063028**	**101926**	**063324**
100/115V 50/60Hz	**063180**	**063180**	**063181**	**101927**	**063323**

Air refill electrovalve system

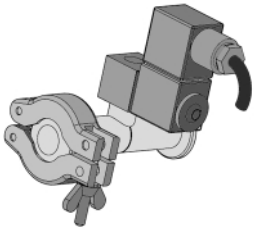

This is used to refill the pump with air after stopping pumping or for a power supply cut.

Venting valves	Exhaust	
	DN 25	DN 40
Powered and controlled by the ACT		**101923***
Powered by the mains and controlled by the ACT		
240V 50/60Hz	**063177**	**063478**
220V 50/60Hz	**056994**	**063191**
200V 50/60Hz	**063176**	**063480**
115V 50/60Hz	**063089**	**063099**
100V 50/60Hz	**063175**	**063479**

* ATP 900 only

GB 00401 - Edition 02 - February 99

Accessories

Reduction flanges

Flange DN 1 / DN 2	Material		P/N
	ALU*	S.S.**	
63 ISO-K / 25 ISO-KF	●		063268
63 ISO-K / 40 ISO-KF	●		063269
63 ISO-K / 50 ISO-KF	●		063270
63 ISO-K / 63 CF-F		●	063267
100 ISO-K / 40 ISO-KF	●		062900
100 ISO-K / 40 ISO-KF		●	068912
100 ISO-K / 50 ISO-KF	●		062901
100 ISO-K / 50 ISO-KF		●	068911
100 ISO-K / 63 ISO-K	●		062902
160 ISO-K / 50 ISO-KF	●		062904
160 ISO–K / 63 ISO-K	●		062905
160 ISO-K / 100 ISO-K	●		062906
160 CF-F / 100 CF-F		●	062903
200 ISO-K / 63 ISO-K	●		062725
200 ISO-K / 100 ISO-K	●		062907
200 ISO-K / 100 ISO-K		●	062909
200 ISO-K / 160 ISO-K	●		062908
200 ISO-K / 160 ISO-K		●	062910
200 ISO-K / 250 ISO-K		●	066659
200 CF-F / 250 CF-F		●	066660

** ALU: Aluminium* *** S.S.: Stainless Steel*

Power supply cable

Connection cable between the pump and the controller.

Cable length	P/N		
	ACT 200 T	ACT 600 T	ACT 1000 T
1 m	105185	105086	105086
1.5 m	A458759	A458885	A458885
3.5 m	101956	101812	101812
5 m	101957	101810	101810
10 m	101958	101811	101811
15 m	-	105303	-
20 m	A458477	A458478	A458478

GB 00401 - Edition 02 - February 99

Integrable controllers

ACT 200 T Brick
ACT 200 T Board

Electronic boards can be substitued to the box version of the controller ACT 200 T when the pump has to be integrated in a complex installation or equipment.
They provide the functions of speed variator, logic control (controlled by serial link or dry contacts) and power supply (ACT 200 T Brick only) and all the necessary securities.
The Board version must be supplied with DC.

ACT 200 T Board

ACT 200 T Brick

ACT 600 T Brick
ACT 600 T Board

Also, theses electronic boards can be substitued to the box version of the controller ACT 600 T.

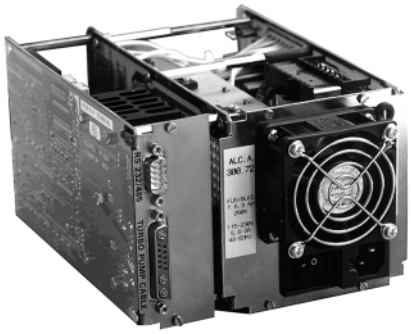

ACT 600 T Board

ACT 600 T Brick

Controller	Part Number	
	ACT 200 T	ACT 600 T
Board	101933	102018
Brick	103517	103997

Connect the integrable controllers to the pump by ordering separately the connection cable (***see A 50 page 2***).

GB 00402 - Edition 03 - March 00

Integrable controllers

OEM Board

The integrable controller "OEM Board" (derivated from CFV 100 former controller range) is a simple PC Board which can easily integrated in an installation. It can drive both ATP 80 and ATP 100 pumps, in local or by remote control.

OEM Board: P/N. P0022E4

Power supply cable OEM Board / ATP 80-100

To connect the PC Board , it is necessary to separately order specific connection cable.

Cable lenght	P/N
0,5 m	**A458755**
2,5 m	**A458369**
3,5 m	**A458425**
5 m	**A458423**
10 m	**A458424**

Accessories

Some accessoiries can be connected to the OEM Board to extand some functions.

OEM Board accessories	P/N
Time meter 5 V	**062761**
Time meter 10 V	**062320**
Outside light kit	**062939**
Interface kit	**062969**

GB 00402 - Edition 03 - March 00

Technical characteristics of pumps

Standard version

Model characteristics			80	100	150	400	900
Inlet flange	DN		63 ISO-K 63 CF-F	100 ISO-K 100 CF-F	100 ISO-K 100 CF-F	160 ISO-K 160 CF-F	200 ISO-K 200 CF-F
Pumping speed	N_2	l/s	80	100	140	400	900
	He	l/s	50	60	100	300	540
	H_2	l/s	40	40	80	250	300
Compression rate	N_2		$8x10^{+7}$	$8x10^{+7}$	$7x10^{+8}$	$7x10^{+8}$	$1x10^{+9}$
	He		2500	2500	$1.2x10^{+4}$	$1.5x10^{+4}$	$2x10^{+4}$
	H_2		300	300	$1x10^{+3}$	$1x10^{+3}$	$2x10^{+3}$
Rotation speed		rpm	27000				
Reduced speed		rpm	from 6000				
Sound level		dBA	≤ 53				
Start-up time (0 to 27000)			1min45s	1min45s	2min	3min	3min
Exhaust flange	ISO-KF		DN 25	DN 25	DN 25	DN 40	DN 40

Standard version characteristics		ATP 80	ATP 100	ATP 150	ATP 400	ATP 900
Limit pressure* measured acc. to Pneurop standard	mbar	$5x10^{-9}$	$5x10^{-9}$	$5x10^{-10}$	$8x10^{-10}$	$5x10^{-10}$
Maximum pressure at inlet in continuous operation**	mbar	$1x10^{-1}$	$1x10^{-1}$	$1x10^{-1}$	$2x10^{-2}$	$1x10^{-2}$
Maximum permissible pressure at exhaust**	mbar	$2x10^{-1}$	$3x10^{-1}$	$4x10^{-1}$	$2x10^{-1}$	$3x10^{-1}$
Maximum ambient temperature*	°C	50				
Flange drying temperature	°C	120	120	100	100	100
Weight natural cooling	kg	3 4.3	3 4.3			
Weight air cooling	kg	4 5.3	4 5.3	6.5	9	17.5 18.5
Weight water cooling	kg	3.4 4.4	3.5 4.7	6.5	9	17 18
Recommended primary pump		Pascal 2005	Pascal 2005	Pascal 2005	Pascal 2015	Pascal 2021

* For a water-cooled pump with CF-F flange and exhaust pressure < 1.10^{-2} mbar.
** The two maximum pressures cannot occur at the same time

GB 00403 - Edition 03 - February 99

Technical characteristics of pumps

Corrosive version «C»

Model characteristics			80	100	150	400	900
Inlet flange	DN		63 ISO-K 63 CF-F	100 ISO-K 100 CF-F	100 ISO-K 100 CF-F	160 ISO-K 160 CF-F	200 ISO-K 200 CF-F
Pumping speed	N_2	l/s	80	100	140	400	900
	He	l/s	50	60	100	300	540
	H_2	l/s	40	40	80	250	300
Compression rate	N_2		$8x10^{+7}$	$8x10^{+7}$	$7x10^{+8}$	$7x10^{+8}$	$1x10^{+9}$
	He		2500	2500	$1.2x10^{+4}$	$1.5x10^{+4}$	$2x10^{+4}$
	H_2		300	300	$1x10^{+3}$	$1x10^{+3}$	$2x10^{+3}$
Rotation speed		rpm	27000				
Reduced speed		rpm	from 6000				
Sound level		dBA	≤ 53				
Start-up time (0 to 27000)			1min45s	1min45s	2min	3min	3min
Exhaust flange	ISO-KF		DN 25	DN 25	DN 25	DN 40	DN 40

Corrosives versions Characteristics		ATP 80 C	ATP 100 C	ATP 150 C	ATP 400 C	ATP 900 C
Limit pressure* without purge meas. according to Pneurop standard	mbar	$5x10^{-9}$	$5x10^{-9}$	$5x10^{-10}$	$8x10^{-10}$	$5x10^{-10}$
Limit pressure* with purge meas. according to Pneurop standard	mbar	$5x10^{-8}$	$5x10^{-8}$	$1x10^{-7}$	$1x10^{-7}$	$1x10^{-7}$
N_2 purge flow rate	SCCM	50				
Maximum pressure at inlet in continuous operation**	mbar	$1x10^{-1}$	$1x10^{-1}$	$5x10^{-1}$	$2x10^{-2}$	$1x10^{-2}$
Maximum permissible pressure at exhaust**	mbar	$2x10^{-1}$	$3x10^{-1}$	$4x10^{-1}$	$2x10^{-1}$	$1x10^{-1}$
Maximum ambient temperature*	°C		40	40	40	40 50
Flange drying temperature	°C	120	120	120	100	100
N_2 purge flange	ISO-KF	DN 16				
Weight air cooling	kg	4 5.3	4 5.3	6.5	9.1	17.7
Weight water cooling	kg	3.4 4.4	3.5 4.7	6.5	9.2	17.2
Recommended primary pump		2005 C2	2005 C2	2021 C2	2033 C2	2063 C2

* For a water-cooled pump with CF-F flange and exhaust pressure < 1.10^{-2} mbar.
** The two maximum pressures cannot occur at the same time

GB 00403 - Edition 03 - February 99

Technical characteristics of pumps

«HPC» version

HPC version characteristics			ATP 400 HPC		ATP 900 HPC	
Inlet flange	DN		100 ISO-K	160 ISO-K	200 ISO-K	200 CF-F
Pumping speed	N_2	l/s	325	380	700	
	Ar	l/s	365	430	785	
	SF_6	l/s	365	430	785	
Compression rate	N_2		$7x10^{+6}$		$1x10^{+7}$	
	Ar		700		$2x10^{+3}$	
	SF_6		100		200	
Limit pressure without purge meas. according to Pneurop standard		mbar	$5x10^{-8}$		$5x10^{-8}$	
Limit pressure with purge meas. according to Pneurop standard		mbar	$8x10^{-6}$		$5x10^{-5}$	
N_2 purge flow rate		SCCM	50			
Maximum pressure at inlet in continuous operation*		mbar	$1x10^{-1}$		$2x10^{-2}$	
Maximum permissible pressure at exhaust*		mbar	$6x10^{-1}$		$4x10^{-2}$	
Rotation speed		rpm	27000			
Reduced speed		rpm	from 6000			
Start-up time (0 to 27000)			2 min			
Maximum ambient temperature		°C	50			
Water circuit temperature		°C	≤ 65			
Noise level		dBA	≤ 53			
Weight		kg	9	8.5	17.7	
Recommended primary pump			2063 C2 or ADP81			
Exhaust flange		ISO-KF	DN 40			
Purge flange		ISO-KF	DN 16			
Max N_2 flux with 2063CP+		SCCM	340	400	450	

* The two maximum pressures cannot occur at the same time

GB 00403 - Edition 03 - February 99

Dimensions of pumps

ATP 80, ATP 100

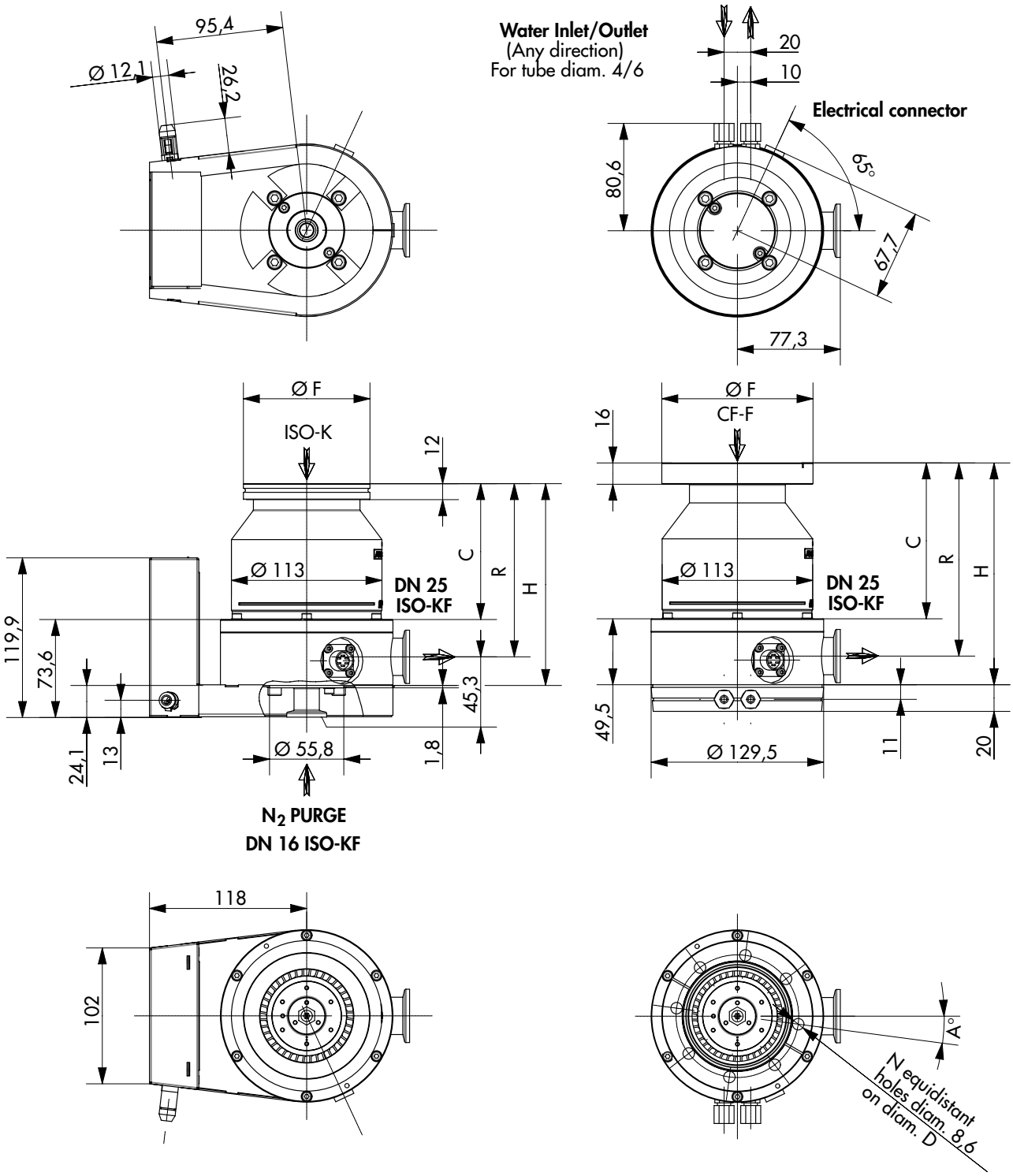

Inlet flange	R	H	C	F	N	D	A°
DN 63 ISO-K	130	151,5	102	95	-	-	-
DN 63 CF-F	145	166,5	117	113,5	8	92,1	7,5°
DN 100 ISO-K	103	124,5	75	130	-	-	-
DN 100 CF-F	123	144,5	95	148,5	16	130,2	18,75°

GB 00404 - Edition 03 - March 00

Dimensions of pumps

ATP 150

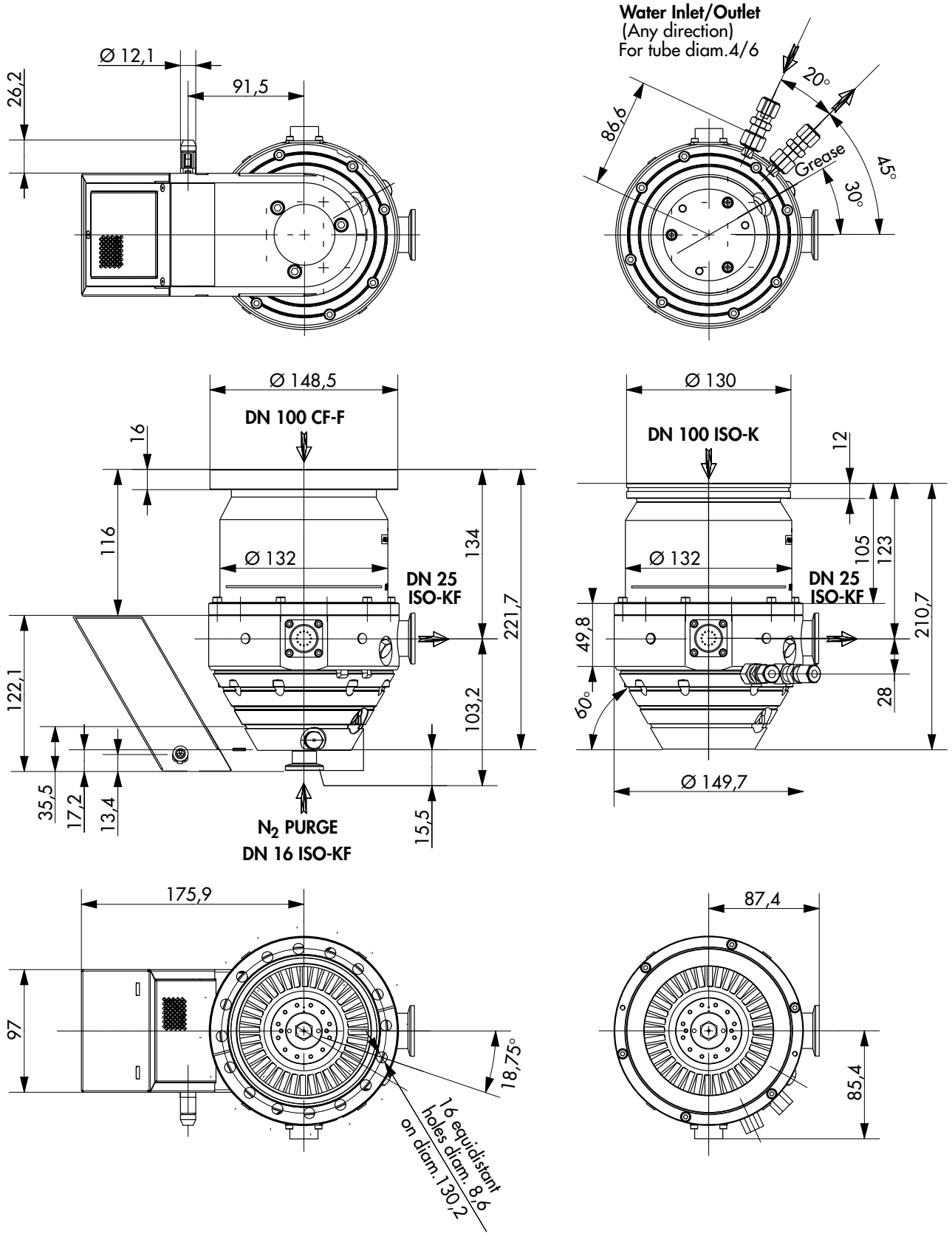

GB 00404 - Edition 03 - March 00

Dimensions of pumps

ATP 400

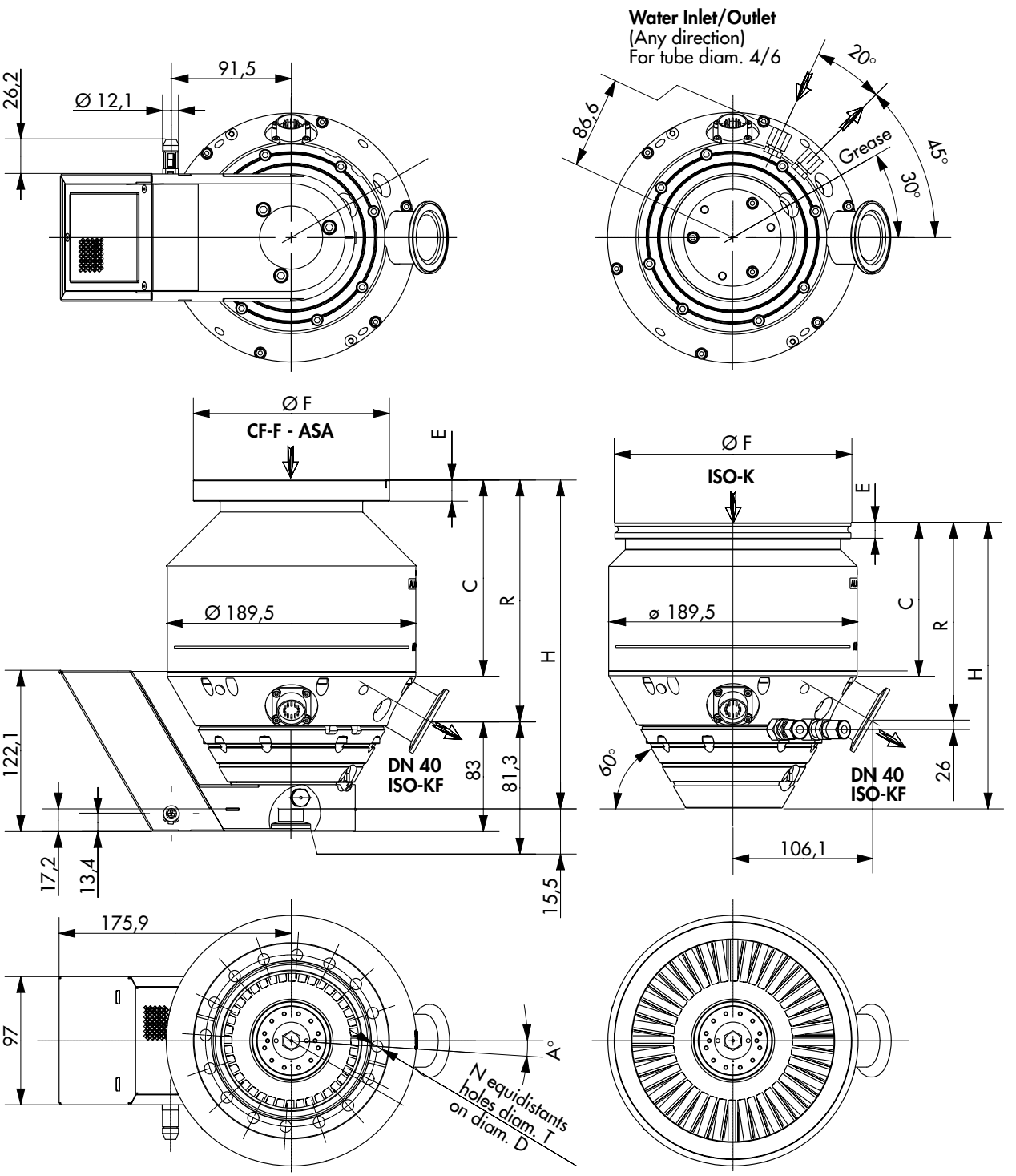

Inlet flange	R	H	C	F	E	N	T	D	A°
DN 100 ISO-K	181,6	247,4	146,9	130	12	-	-	-	-
DN 100 CF-F	183,1	248,9	148,4	148,5	16	16	8,6	130,2	3,75°
DN 160 ISO-K	151,1	216,9	116,4	180	12	-	-	-	-
DN 160 CF-F	168,1	233,9	133,4	198	16	20	8,6	181,1	6°
ASA 6"	161,1	225,9	125,4	279,4	19	8	20,6	241,3	22,5°

GB 00404 - Edition 03 - March 00

Dimensions of pumps

ATP 900

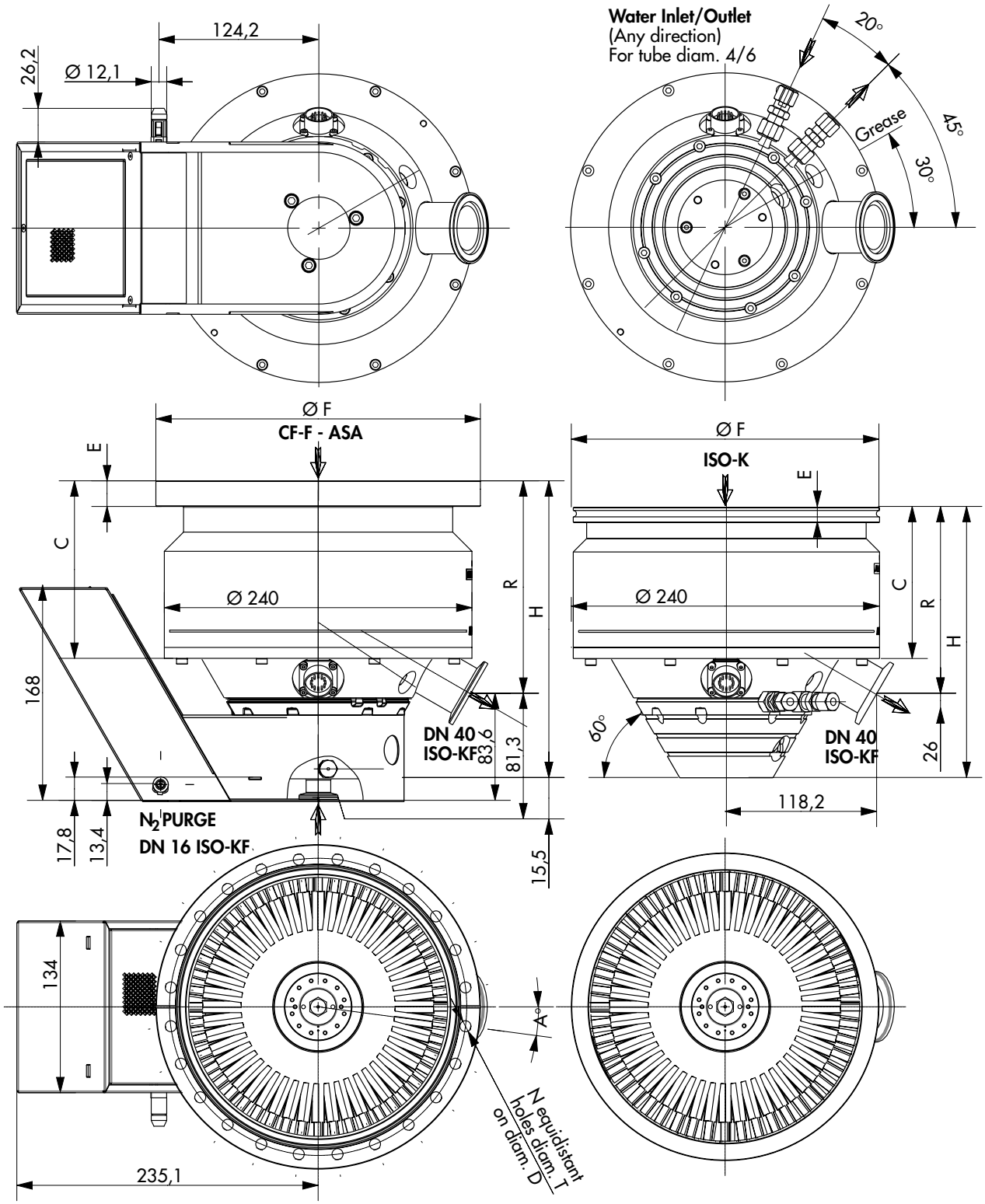

Inlet flange	R	H	C	F	E	N	T	D	A°
DN 200 ISO-K	145,8	211,5	118,5	240	12	-	-	-	-
DN 200 CF-F	165,8	231,5	138,5	253,2	20	24	8,6	231,9	7,5°
ASA 6"	177,8	243,5	150,4	279,4	19	8	20,6	241,3	22,5°

GB 00404 - Edition 03 - March 00

Dimensions of pumps

ATP 400 HPC

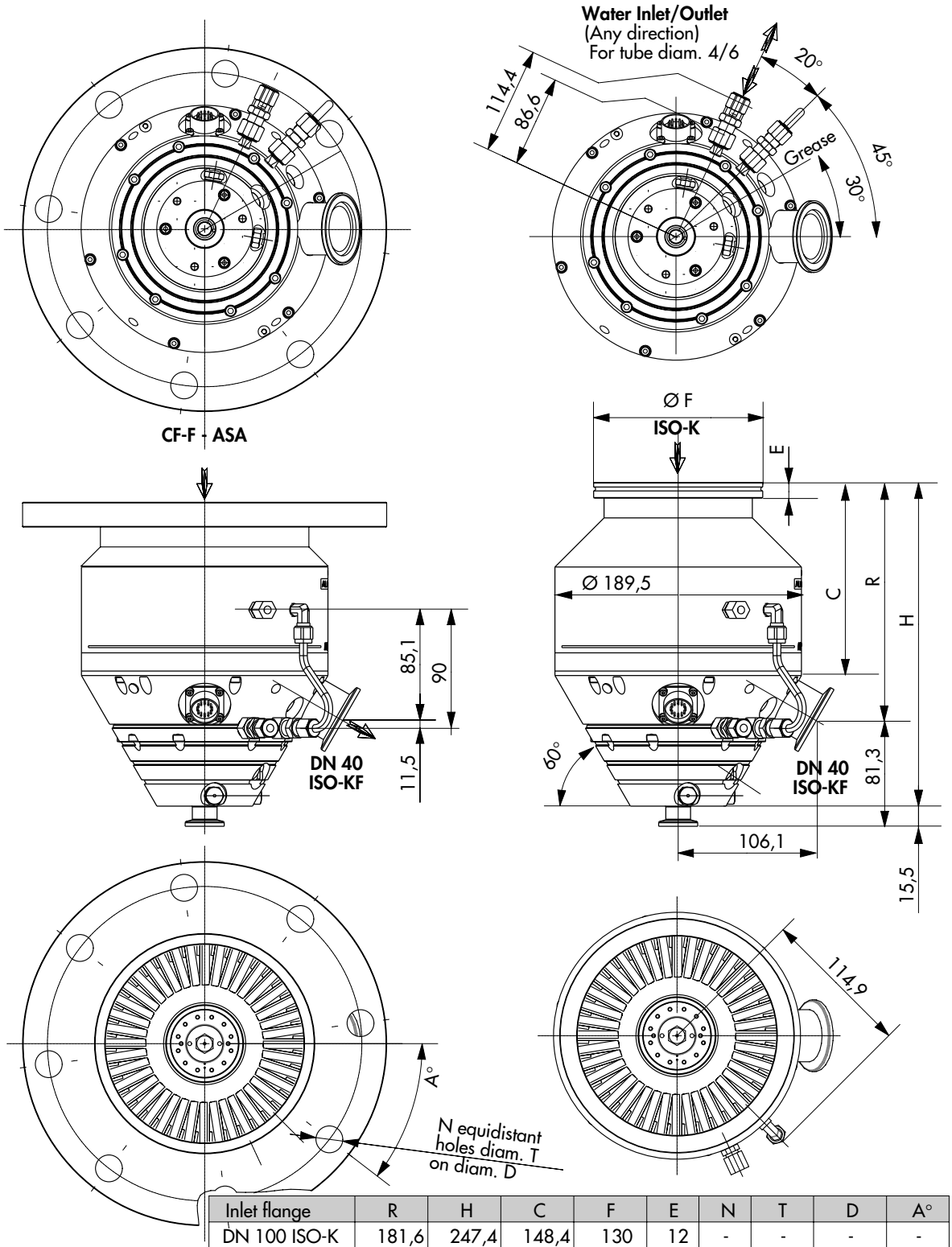

Inlet flange	R	H	C	F	E	N	T	D	A°
DN 100 ISO-K	181,6	247,4	148,4	130	12	-	-	-	-
DN 100 CF-F	183,1	248,9	148,4	148,5	16	16	8,6	130,2	3,75°
DN 160 ISO-K	151,1	216,9	116,4	180	12	-	-	-	-
DN 160 CF-F	168,1	233,9	133,4	198	16	20	8,6	181,1	6°
ASA 6"	161,1	225,9	125,4	279,4	19	8	20,6	241,3	37,5°

GB 00404 - Edition 03 - March 00

Dimensions of pumps

ATP 900 HPC

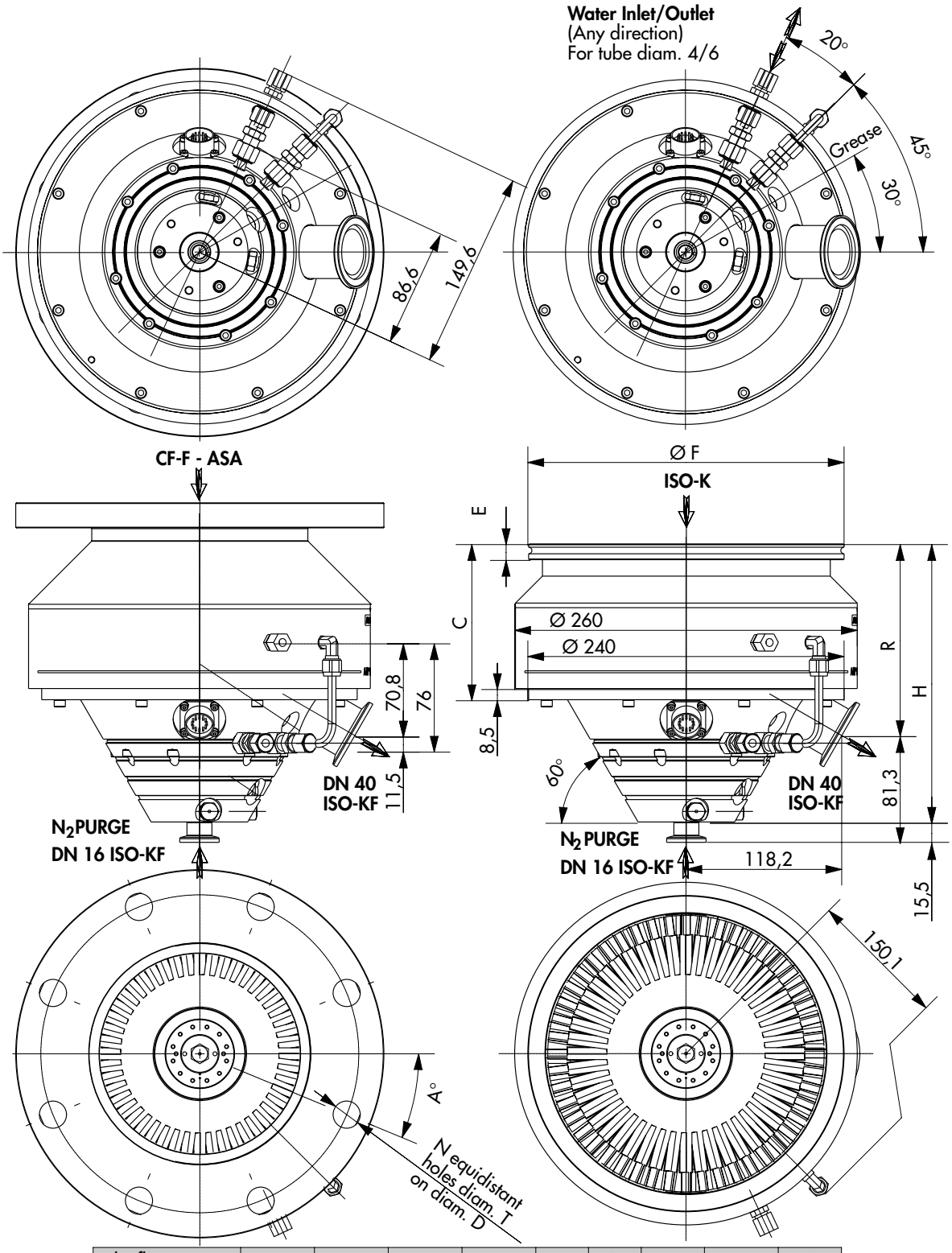

Inlet flange	R	H	C	F	E	N	T	D	A°
DN 200 ISO-K	145,8	211,5	118,5	240	12	-	-	-	-
DN 200 CF-F	165,8	231,5	138,5	253,2	20	24	8,6	231,9	7,5°
ASA 6"	177,8	243,5	150,4	279,4	19	8	20,6	241,3	22,5°

GB 00404 - Edition 03 - March 00

Controller technical characteristics

Electrical characteristics ACT 200T and ACT 600T

Characteristics		ACT 200T	ACT 600T
Weight	kg	2.6	4
Dimensions HxLxP	mm	128.4x107x220	128.4x213x245
Nominal voltage		85-132 V et170-264V 48/63 Hz	
Maximum current		5.8 A / 3 A	
Maximum power	W	100	300
Ambient operating temperature		T ≤ 50°C	
Customer mains circuit breaker rating		10 A	

Dimensions

ACT 200T

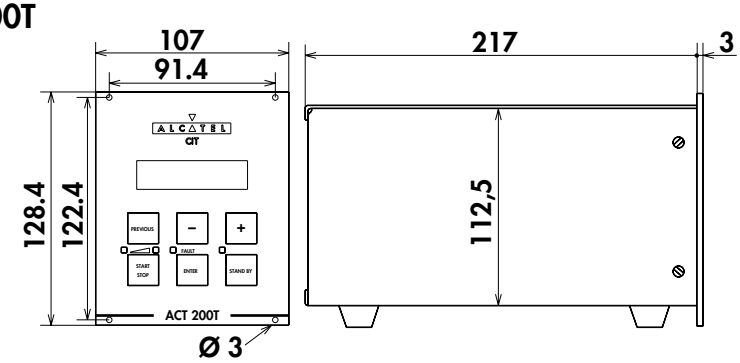

ACT 600T

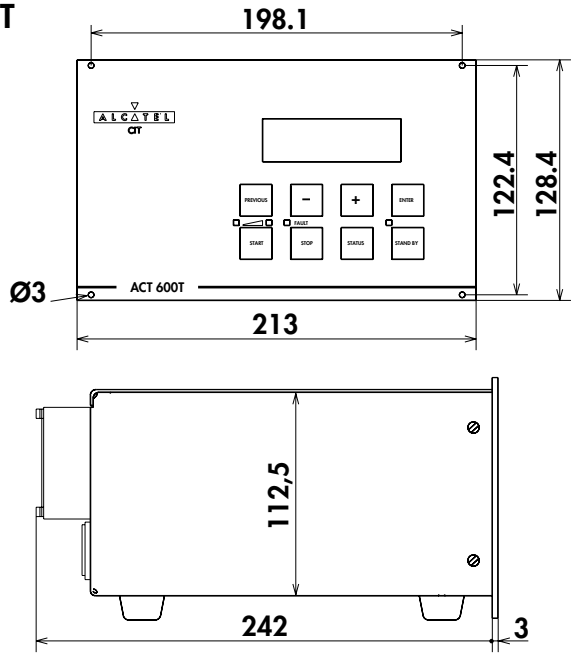

GB 00405 - Edition 03 - February 99

Controller technical characteristics

Electrical characteristics ACT 1000T

Characteristics		ACT 1000T
Weight	kg	8.5
Dimensions HxLxP	mm	132.5x219x453
Power supply		100-120 V 200-240 V 50/60 Hz
Maximum power	W	800
Ambient operating temperature		T ≤ 50°C
Customer mains circuit breaker rating		16 A

Dimensions ACT 1000T

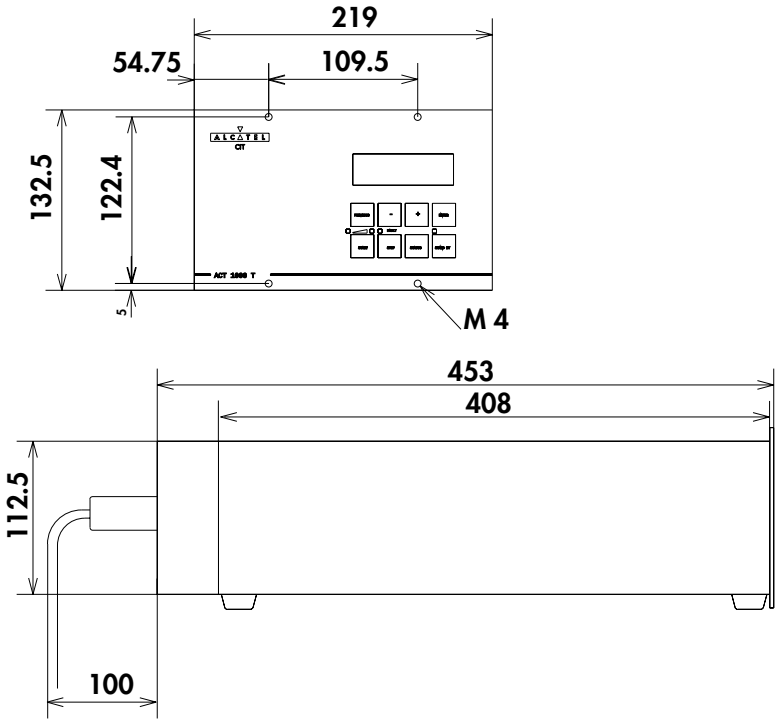

GB 00405 - Edition 03 - February 99

Integrable Brick & Board controller technical characteristics

ACT 200 T Brick

Dimensions (Board + Power supplying)

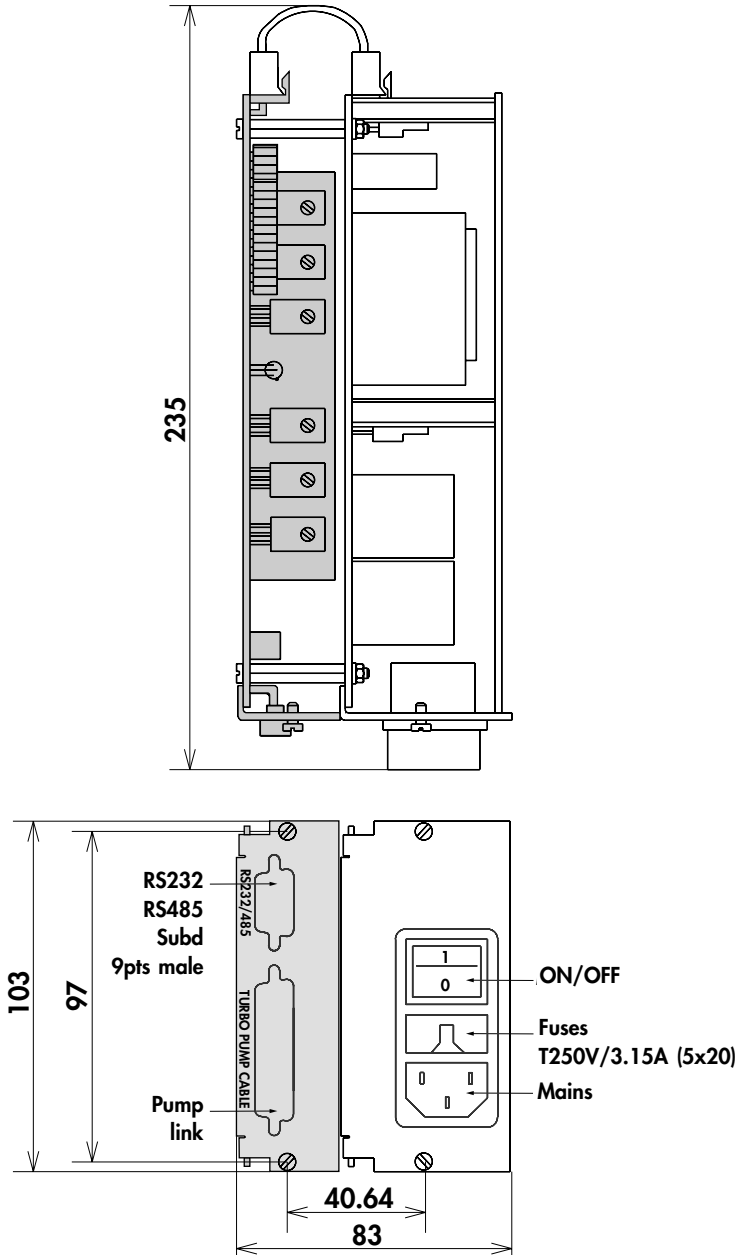

Power supplying of ACT 200 T Brick

Nominal voltage:	115/230 V - 48/63 Hz
Maximum current:	5.8 A / 3 A
Maximum power:	100 W

GB 00406 - Edition 04 - March 00

Integrable Brick & Board controller technical characteristics

ACT 200 T Board

ACT 200 T Board
It can be installed in an Europe size rack:
Height: 100 mm - Depth: 180 mm
Outside depth: 210 mm

Dimensions

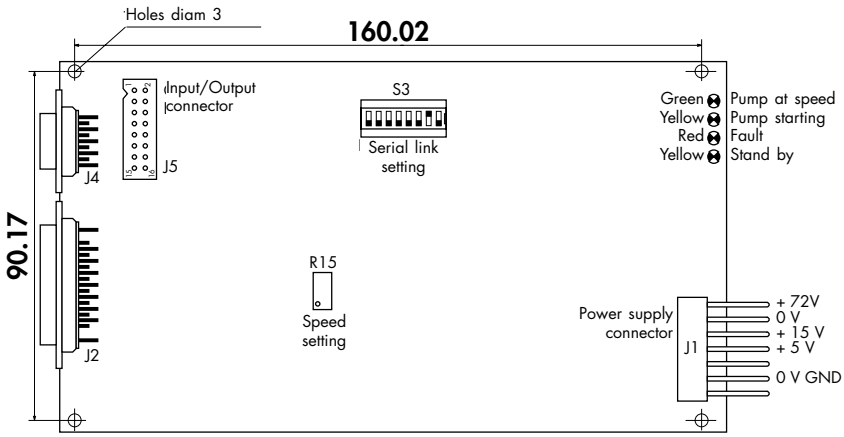

Power supplying of ACT 200 T Board

Connector : type Molex Series 30-69 P.N. 09 - 91 - 0700 equipped with 7 contacts P.N. 08 - 050 - 0106

DC voltage necessary to supply the board:
+ 72 V / 1.4 A ± 1 V
+ 15 V / 0.25 A ± 100 mV
+ 5 V / 0.4 + 50 mV / - 100 mV

Functions of these integrable controllers (***see B 130***).

GB 00406 - Edition 04 - March 00

Integrable Brick & Board controller technical characteristics

ACT 600 T Brick

Dimensions (Board + Power supplying)

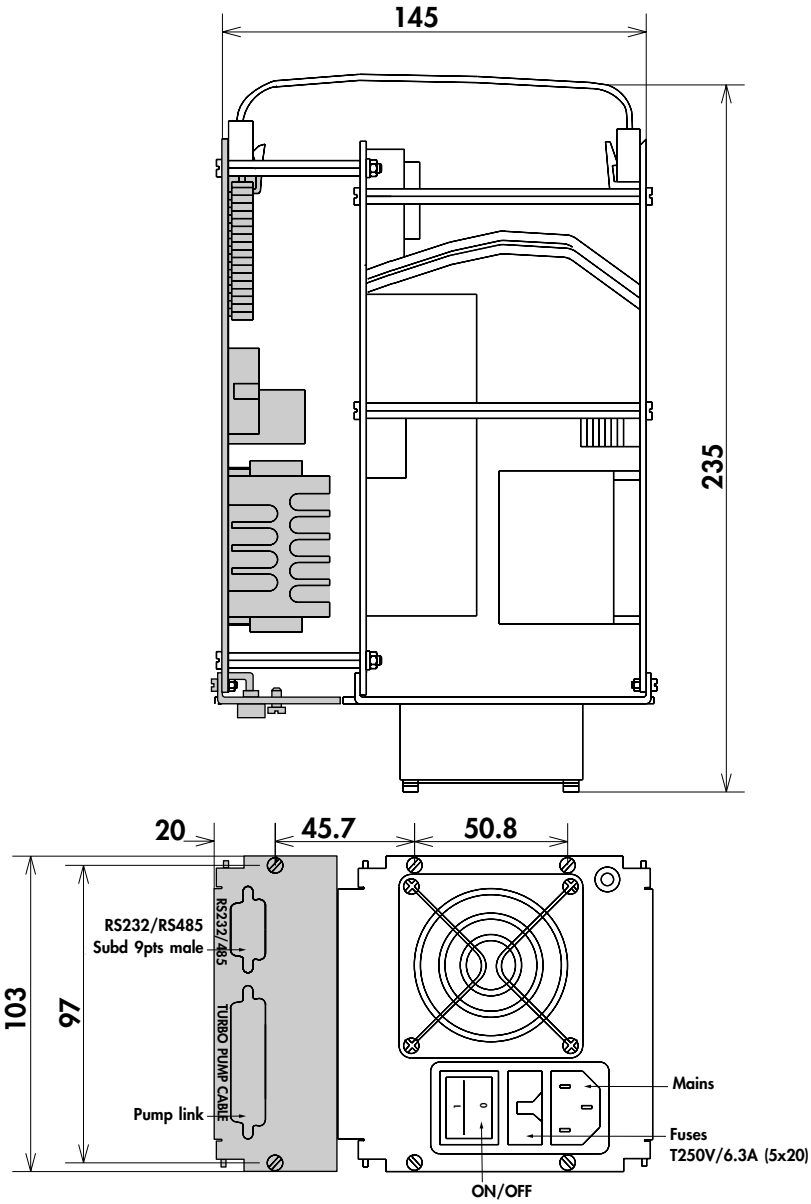

Power supplying of ACT 600 T Brick

Nominal voltage:	115/230 V - 48/63 Hz
Maximum current:	5.8 A / 3 A
Maximum power:	300 W

GB 00406 - Edition 04 - March 00

Integrable Brick & Board controller technical characteristics

ACT 600 T Board

ACT 600 T Board
It can be installed in an Europe size rack:
Height: 100 mm - Depth: 180 mm
Outside depth: 210 mm

Dimensions

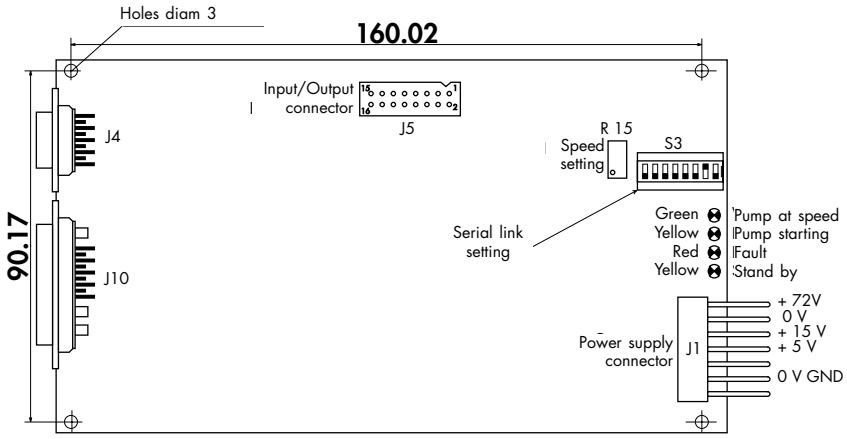

Power supplying of ACT 600 T Board

Connector : type Molex Series 30-69 P.N. 09 - 91 - 0700 equipped with 7 contacts P.N. 08 - 050 - 0106

Voltages delivered by the board:
+ 72 V / 4 A ± 1 V
+ 15 V / 0.25 A ± 100 mV
+ 5 V / 0.4 A + 50 mV / - 100 mV

Functions of these integrable controllers (***see B 130***).

GB 00406 - Edition 04 - March 00

Integrable OEM Board controller technical characteristics

OEM Board

Installed with M3 screws x 6, or in sliding rail (in Alcatel unit):
Dimensions: 213 x 98 mm.

Encombrements

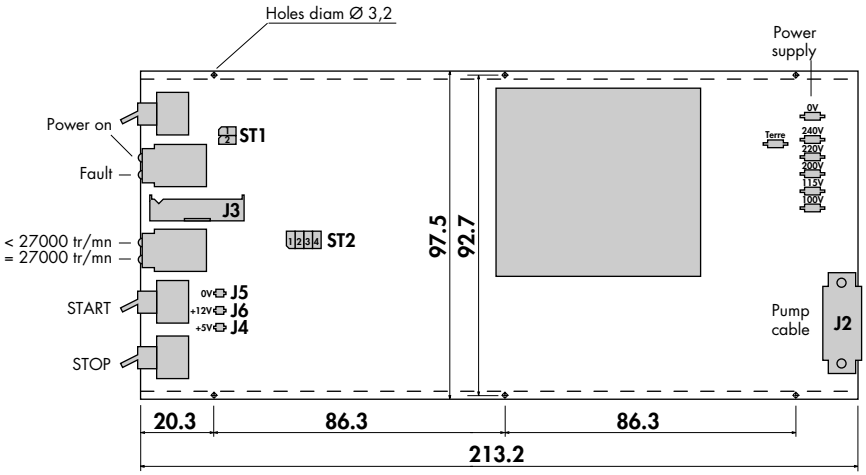

Power supplying of OEM Board

A terminal plug with 7 pins, allows to supply the board 110 - 115 - 200 - 220 - 240 V AC, 50/60 Hz.

Secure the power line with an external time-delay fuse depending on the power supply:
1 A for 100 / 115 V
0.5 A for 200 / 220 / 240 V

Functions of these integrable controllers (***see B 140***).

GB 00407 - Edition 02 - March 00

Chapter B

ATP User's Manual

Start-up

GB 00408 - Edition 09 - February 99

Safety instructions

Before switching on the pump, the user should study the manual and follow the safety instructions listed in the compliance certificate booklet supplied with the pump.

Unpacking

To keep your product in the clean condition in which it left our factory, we recommend to unpack the pump only on its assembly site.

It is advisable to keep the packaging.

Storage

- Our equipment can be stored without special precautions (ambient temperature between 5 and 40° C) **provided that the running-in procedure specified in the manual is observed for the first operation of the pump.**

- The seal kits must be stored away from heat and light (direct sunlight and ultraviolet radiation) in order to prevent any hardening of the elastomers.

Installation
Start-up

- Our products are designed to comply with current EEC regulations. **Any modification of the product made by the user** is liable to lead to non-compliance with the regulations, or even to put into doubt the EMC (electromagnetic compatibility) performance and the safety of the product. ALCATEL declines any responsibility for such operations.

GB 00409 - Edition 01 - March 97

Safety instructions

Installation
Start-up
(continued)

• Before any maintenance operations on a product performed by a maintenance technician who has not received safety training (EMC, electrical safety, chemical pollution, etc.), isolate the product from the various energy sources (electricity, compressed air, etc.).

• The EMC performance of the product is obtained on the condition that the installation complies with EMC rules.
In particular, in disturbed environments, **it is essential** to:
- use shielded cables and connections for interfaces,
- stabilize the power supply line with meshing from the power supply source to a distance of 3 m from the product inlet.

• The units containing control circuits are designed to guarantee normal safety conditions taking their normal operating environment into account (use in rack). In specific cases of use on tables, make sure that no objects enter the ventilation openings or block the openings when handling the units.

• Certain controllers can be configured to start up automatically after a power cut.
In this case, it is the user's responsibility to take all the precautions required to prevent the risks resulting from this type of operation.

• When switching off an item of equipment containing loaded capacitors at over 60 VDC or 25 VAC, take precautions concerning the access to the connector pins (single-phase motors, equipment with mains filter, frequency converter, monitoring unit, etc.).

• When handling the equipment, use the devices provided for this purpose (hoisting rings, handle, etc.).

GB 00409 - Edition 01 - March 97

Safety instructions

Installation
Start-up
(continued)

• Risk of toppling over: although compliance with EEC safety regulations is guaranteed (normal range ± 10°), it is recommended to take precautions against the risk of toppling over during handling, installation and operation.

• The performance and the operational safety of this product are guaranteed provided that it is used in normal operating conditions.

• The vacuum pump is also a compressor: incorrect use may be dangerous.
Study the user manual before starting up the pump.

• The access to the rotor of a turbomolecular pump with an unconnected intake is dangerous. Similarly, if the pump is not switched on, it may be driven by another pump in operation (risk of cuts).

• Make sure that the parts or chambers connected to the intake of our pumps withstand a negative pressure of 1 bar in relation to the atmospheric pressure.

• The leaktightness of the products is guaranteed when they leave the factory for normal operating conditions. It is the user's responsibility to maintain the level of leaktightness particularly when pumping dangerous gases.

GB 00409 - Edition 01 - March 97

Pump connections to an installation

The pump can operate in any position

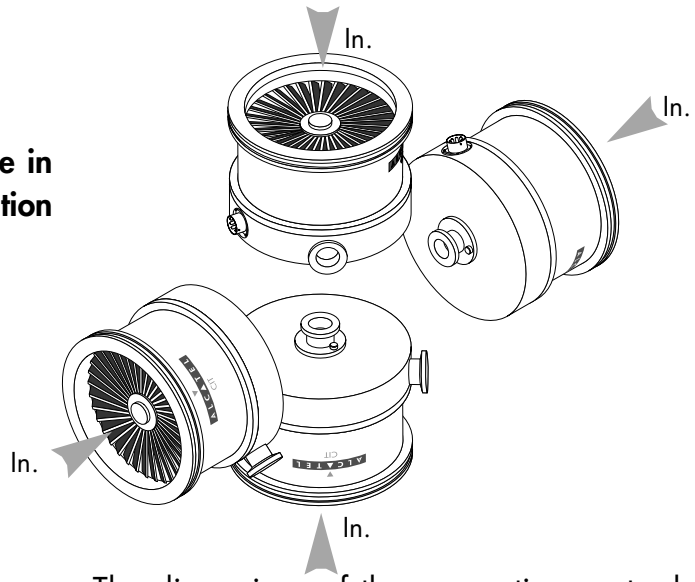

The connection of the pump to the installation must be sufficiently rigid.

For this, reduce the following as much as possible:
- dimensions **a** and **b** and the flexibility of the connection plate;
- the overhang **c** between the pump and its anchor point.

The dimensions of the connection parts should be studied carefully:

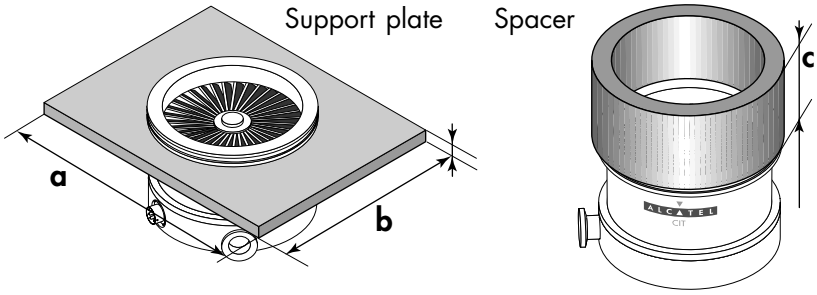

Some examples of unrecommended connection:

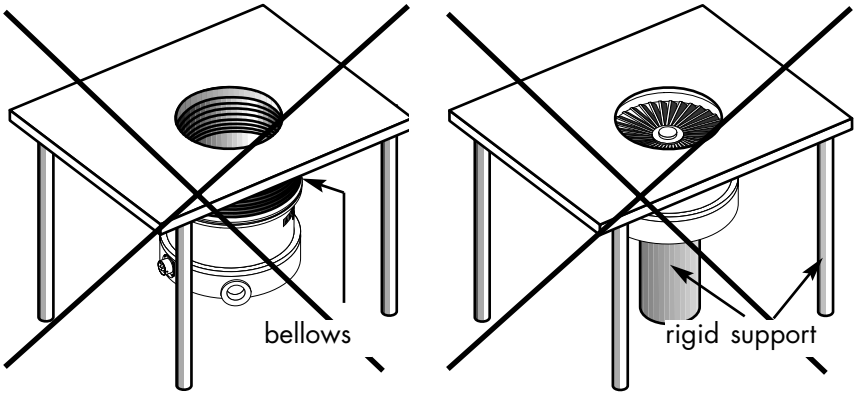

The equipment attachment devices should be sufficiently rigid to prevent potential risks in the event of failure of a rotary component or a violent shock on the pump (exceptional phenomena).
For this, use the rotary flange attachment holes.
If the intake flange is attached with grips, use:
- at least 3 grips for secondary pump ≤ 150 l/s;
- at least 6 grips for secondary pump > 150 l/s.

GB 00410 - Edition 01 - March 97

Mechanical connections

Remove the protective parts blocking the intake, exhaust (and, if applicable, purge) openings; these components prevent foreign bodies from entering the pump during transport and storage.
It is dangerous to leave them on the pump in operation.

Ambient operating temperature

Air or natural convection cooled ATP: 0°C < T < 35°C;
Water-cooled ATP: 0°C < T < 50°C.

Inlet

Install the screen filter or compact filter accessory on the pump; connect the pump to the installation*.

Exhaust

Connect the vent electrovalve accessory on the pump.
Connect the pump to primary pumping circuit*.

Purge
for C and HPC models

A filtered dry nitrogen supply with the following characteristics is required:
- Dew point < 22°C
- Dust < 1µm
- Oil < 0.1ppm
- Absolute pressure of 1 to 1.3 bar.

Connect the nitrogen pipe to the DN16 purge fitting*. A built-in safety valve controls the pressure and guarantees a flow rate of 50 SCCM.

* Different connection accessories can be found in the ALCATEL catalog.

GB 00411 - Edition 01 - March 97

Water cooling connection

Water characteristics

It is recommended to use cooling water with the following characteristics:
- pH between 7.5 and 11
- Hardness < 7 milli-équivalent/dm^3
- Resistivity > 1500 Ω.cm
- Solid pollution < 100 mg/dm^3
- Max pressure = 7 bars
- Temperature:
10 < T < 25°C (Std and C) and 0 < T ≤ 65°C (HPC).

Connection

Connect the cooling circuit with a rigid stainless steel or copper pipe (int. diam. 4 mm - ext. diam. 6 mm) (supplied by customer).

The water flow rate is 0.2 to 1 l/min for water at 15°C at an ambient temperature of 25°C.

GB 00412 - Edition 01 - March 97

ACT 200 T and 600 T electrical connections

If the controller is remote controlled, make the various connections on the **REMOTE CONTROL** connector (see ***B 60***).

If the controller unit is used in **local mode:** the pump can only operate **if the plug is connected to the REMOTE CONTROL connector**.
(Connector plug delivered with the controller).

REMOTE CONTROL
connector plug
(factory wiring)

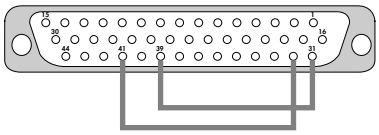

Wiring viewed on soldered side

Display contrast setting

Connect the **RS232/485** serial link cable to the connector

(cable supplied by customer)

~ Power supply

Connect the **electrical venting valve** powered by the mains and driven by the controller. (voir ***B 60***).

Fuse access

	Delayed fuses	
ACT 200T	3.15 A	250 V
ACT 600T	6.3 A	250 V

Connect the controller to the pump using the cable ordered.

Connect the fan (ATP air cooled)

Connect the controller to the mains using the cable supplied. (Mains with earth connection)

GB 00413 - Edition 02 - February 99

ACT 200 T and 600 T "Remote Control" connector wiring

When the units containing the control circuits are equipped with dry contact outputs, it is the customer's responsibility to use the outputs in compliance with safety regulations.

The control by voltage

The inputs are considered to be activated if the AC or DC voltage applied is between 5 and 30 Volts:
(DB 44 contacts, female connector)

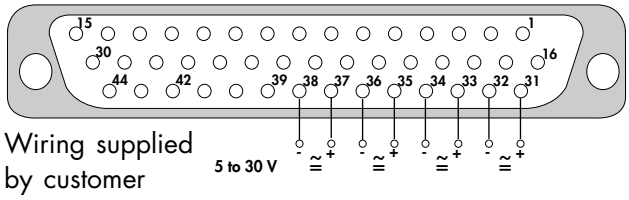

These inputs can be controlled by external contacts using the following wiring :

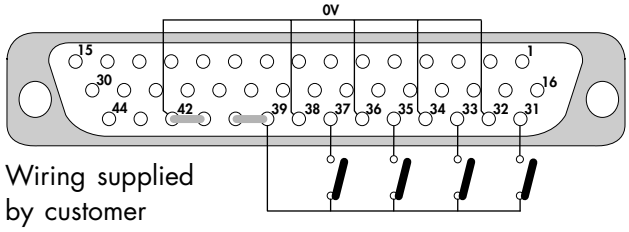

Principle of the input controlled by voltage

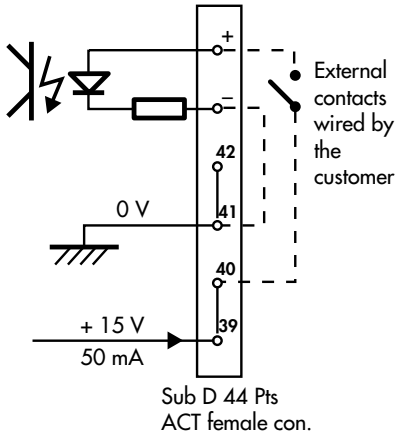

Ext. Safety **31 - 32**	When a voltage is applied on these inputs, the pump is running (see terminal plug wiring). The wiring of an external contact allows to signal an external safety when the contact is opened (i.e. emergency stop).
REMOTE Mode **33 - 34**	When a voltage is applied on these inputs, the Remote is validated. The opening of an external wired contact allows Local mode (pump control using front panel keypad).
STANDBY Mode **35 - 36**	When a voltage is applied on these inputs, the pump rotates at reduced speed. The opening of an external wired contact allows pump rotation at nominal speed.
Start/Stop **37 - 38**	When a voltage is applied on these inputs, the pump starts up and accelerates to reach its nominal or reduced speed (depending on set parameters). The opening of an external wired contact allows pump stopping.

GB 00414 - Edition 03 - February 99

ACT 200 T and 600 T "Remote Control" connector wiring

Signaling using output contacts:

These are dry contacts (**250VAC-1A),** their function is to replicate the data concerning the pump operating status.

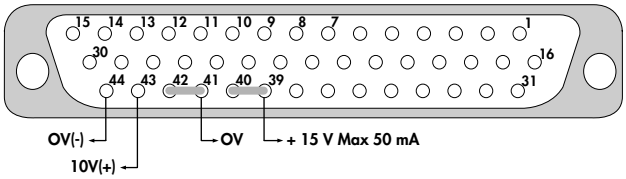

When the output **contact** is closed, this indicates:

1 - 2	The pimp is in running-in mode.
5 - 6	The pump is operating
7 - 8	Copy of Start command. This contact can be used to drive the roughing pump (***see C 50***).
9 - 10	The standby mode is selected.
11 - 12	No faults are signalled.
13 - 14	The pump has reached its nominal speed.
15 - 30	The venting valve fitted in the pump is closed (accessory).

A 0-10V analog output is used to monitor variations in certain pump parameters (speed, temperature, etc.)
This data can be used to plot curves.

44 - 43	Used to monitor the selected parameter in the "Set Analog output" menu (***see B 70***).

GB 00414 - Edition 03 - February 99

ACT 200 T and ACT 600 T controller start-up

Once the various electrical connections have been made, set the main switch on the rear panel to "**I**".

The controller performs a self-test and identifies the pumps to which it can be connected.

The initialization time is approximately 12 seconds.

Display initialization

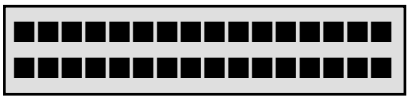

Indicator light test:
they are lit in succession.

The equipment is identified : the programs versions are displayed.

```
      ATP  80/100
VV:1.10   VE:1.10
```

The pump operation time and the speed are displayed.

```
52H              0RPM
 READY  TO  START!
```

The parameter setting keys

Parameter setting access — PREVIOUS
- used to access the parameter setting mode.
- used to exit the various menus without validating the functions.

Selection — + / −
- used to move in the menus, or from one parameter to another.
- used to select or adjust the value of the selected parameter.

Validation — ENTER
- used to validate the selection of a menu, parameter or value.

STATUS
- used to exit the menus and return to the pump parameter display (on ACT 600 T).

Configure the parameters for the application using the various menus

Enter the sub-menus by pressing PREVIOUS

```
DISPLAY        SETUP
    RUNNING  IN
```

- Access the parameter programming.
- Display the monitored parameters.
- List the faults and the alerts.
- Select a running-in cycle;
- Start the cycle.

GB 00415 - Edition 02 - Feburary 99

ACT 200 T and ACT 600 T controller start-up

Configuring the controller

DISPLAY SETUP RUNNING IN	ENTER + −		Factory configuration
Enter the access code	ACCESS CODE	Enter the access code and validate	0
Configure the 0-10V output	SET ANALOG-OUT	SPEED: 6.75V = 27000rpm I motor: ATP 80/100: 2.5A / 10V ATP 150/400: 5.1A / 10V θ.PUMP: 0.1V per 1°C θ.CONT: 0.1V per 1°C	Speed
Modify the STANDBY speed	STANDBY SPEED	6000 to 27000 rpm	12000
Give the authorization to restart the pump after a power cut	AUTO-STARTING	YES or NO	NO
Activate or disactivate the buzzer	BUZZER	ON or OFF	ON
Select the temperature measurement unit	TEMPERATURE UNIT	°C or °F	°C
Set the serial link parameters	SET SERIAL LINK	RS232/RS485/NETWORK (see sub-menus folio 3 & 4)	RS232
Modify the time before starting up the pump	SET START DELAY	0 to 240mn 59s	0mn 0s
Modify the time before opening the venting valve	TIME TO VENTING	0 to 59mn 59s	0mn 1s
Modify the venting valve opening time	VENTING TIME	0 to 59mn 59s	0mn 1s
Program the maximum operating time before regreasing the bearings	MAINTENANCE	M=0 (1000 to 15000 h) M=1 (1000 to 30000 h) M=2 (1000 to 45000 h) (3 times the maintenance time) (see E 80)	M=0 5000h
Ball bearings life time counter	TIME BEARING	0 to 50000 hours	0 h
Modify the access code	NEW CODING	0 to 65535	0

GB 00415 - Edition 02 - Feburary 99

ACT 200 T and ACT 600 T controller start-up

Serial link setting

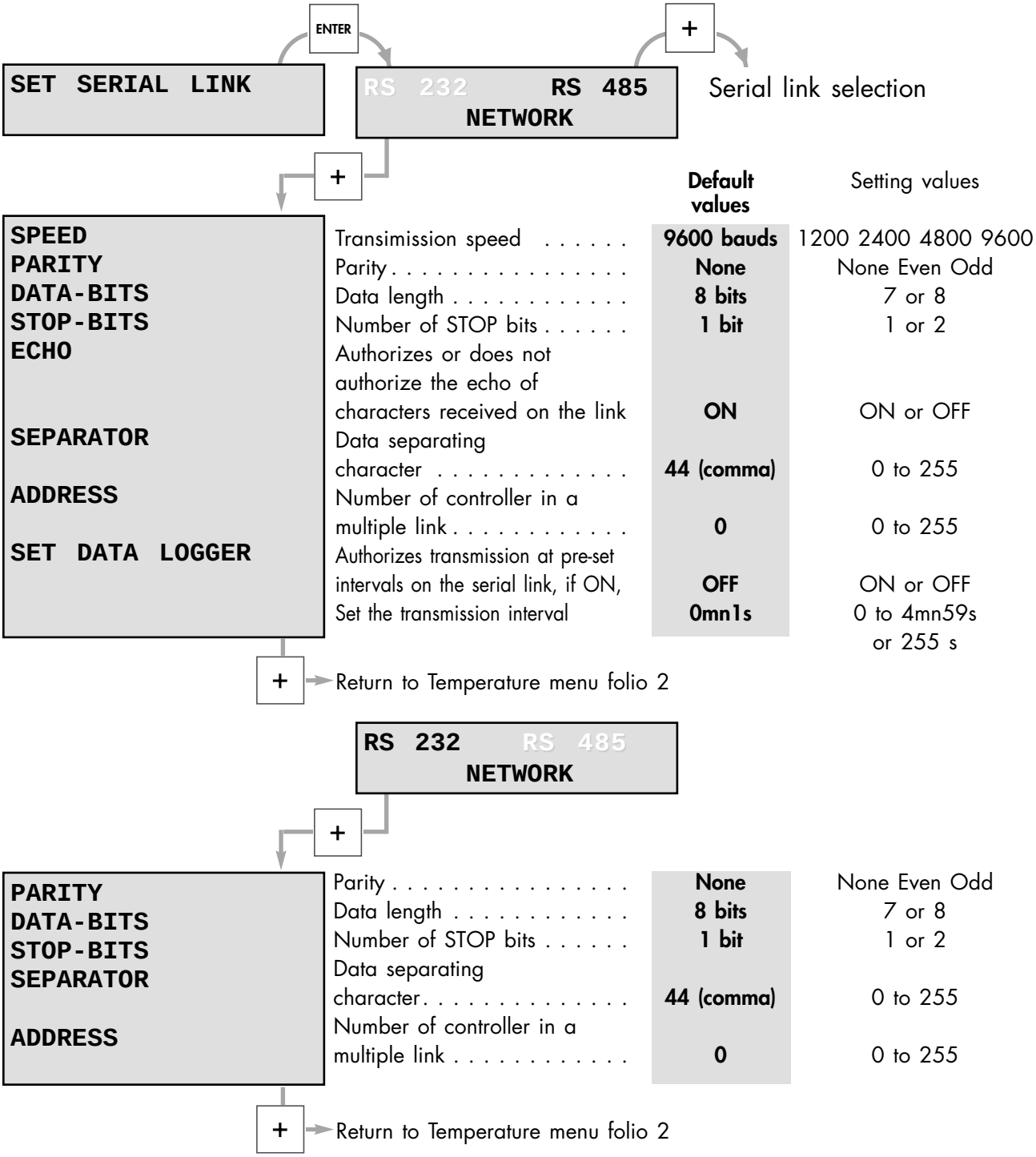

GB 00415 - Edition 02 - Feburary 99

ACT 200 T and ACT 600 T controller start-up

Serial link setting
(continued)

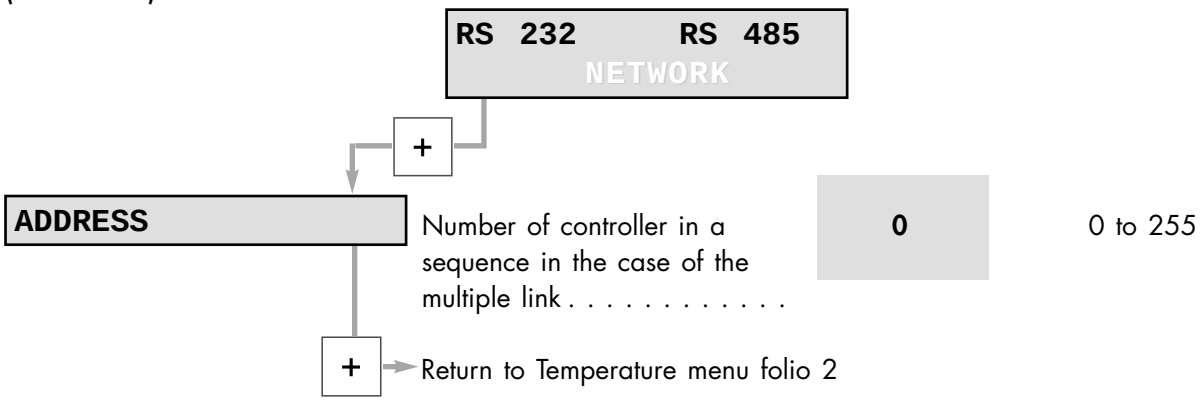

GB 00415 - Edition 02 - Feburary 99

ACT 1000T electrical connections

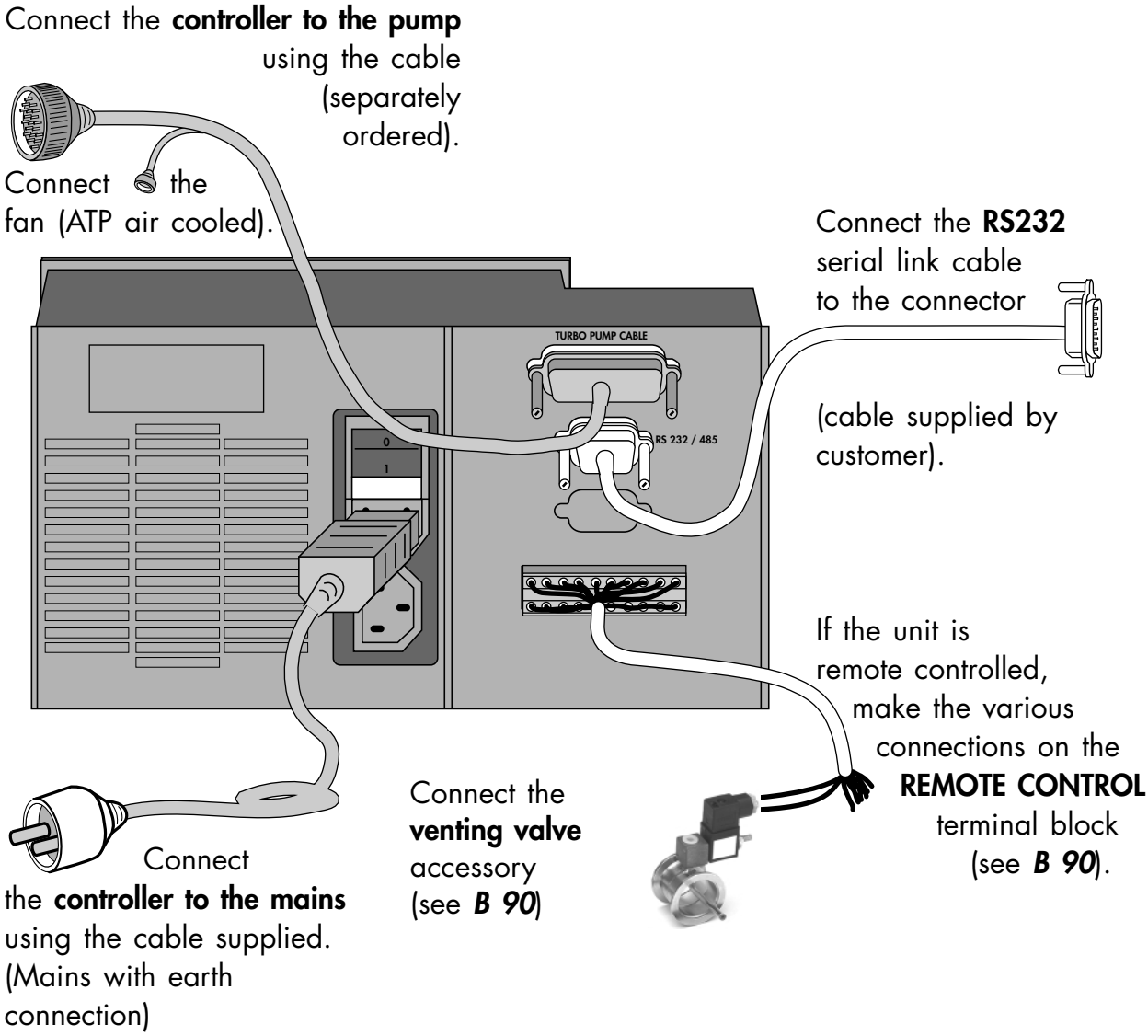

GB 00416 - Edition 01 - March 97

ACT 1000 T "Remote Control" connector wiring

When the units containing the control circuits are equipped with dry contact outputs, it is the customer's responsibility to use the outputs in compliance with safety regulations.

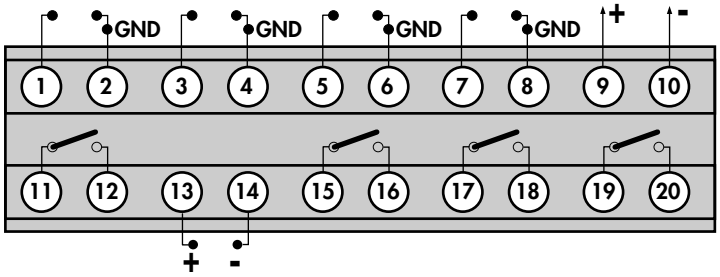

The control contacts

Ext. safety **1 - 2**	When the contact is closed, an external safety device is signalled: the motor is stopped and the controller generates a fault. This contact must be opened for the pump to operate.
Start/Stop **3 - 4**	When the contact is closed, the pump is started up and accelerates to reach its nominal or reduced speed (depending on parameter settings). If the contact is open, the pump is no longer powered.
REMOTE mode **5 - 6**	When the contact is closed, the remote control mode is selected. If the contact is open, the local mode is selected (control using the front panel keypad).
STANDBY mode **7 - 8**	When the contact is closed, the reduced speed rotation mode is selected.
Analog output **9 - 10**	Used to monitor the selected parameter (see ANALOG OUT menus).

0 -10 V analog output:

GB 00417 - Edition 01 - March 97

ACT 1000 T "Remote Control" connector wiring

Signaling using output contacts

These are dry contacts: (**250VAC-1A**) their function is to copy the data concerning the pump operating status.

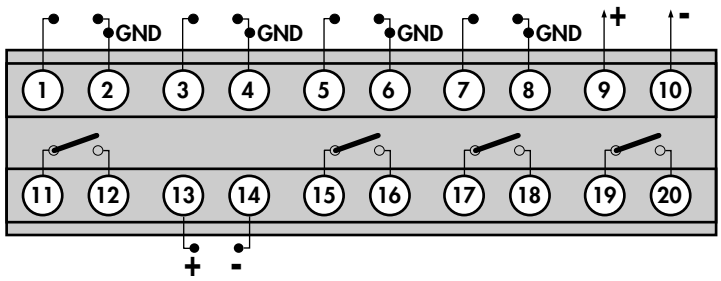

Shut-off valve **11 - 12**	The contact is opened when a functional fault appears or when the "STOP" control is activated. In the latter case, the pump is reset to atmospheric pressure. The contact can be used to control a secondary shut-off valve in order to retain the pressure in the chamber when the pump is reset to atmospheric pressure.
Air inlet valve **13 - 14**	Venting valve control and power supply (12V).
Speed **15 - 16**	The contact is closed when the pump reaches the selected speed.
Fault **17 - 18**	The contact is open if a fault appears and the motor is stopped.
Start **19 - 20**	The contact is closed when the "START" control is activated. The contact can used to control a primary shut-off valve.

GB 00417 - Edition 01 - March 97

ACT 1000 T controller start-up

Once the various electrical connections have been made, set the main switch on the rear panel to "**I**".

The controller performs a self-test and identifies the pump to which it is connected.

The initialization time is approximately 4 seconds.

Display initialization

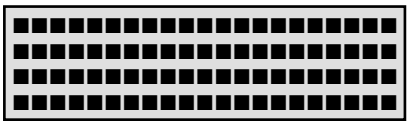

The equipment is identified, the program version is displayed.

```
ACT 1000 T V2.XX
-----------------------------
---------------
CHECKING PROCEDURE
```

Indicator light test: they are lit in succession.

The working screen is displayed.

```
SEP/20/95          12:24:54
ROT. SPEED            0 RPM
Θ1 PUMP               21°C
```

The parameter setting keys

Parameter setting access — PREVIOUS
- used to access the parameter setting mode.
- used to exit the various menus without validating the functions.

Selection — + / −
- used to move in the menus, or from one parameter to another.
- used to select or adjust the value of the selected parameter.

Validation — ENTER
- used to validate the selection of a menu, parameter or value.

STATUS
- used to exit the menus and return to the pump parameter display

Configure the parameters for the application using the various menus.

Enter the sub-menus by pressing PREVIOUS

```
DISPLAY        PARAMETERS
```

Access the parameter programming (see folio 2).

Display and/or select the parameters to be monitored (see folio 4).

GB 00418 - Edition 02 - February 98

ACT 1000 T controller start-up

Programming the parameters

PARAMETERS — ENTER — + — −

				Factory configuration
Modify the date	DATE			
Modify the STANDBY speed	SPEED		6000 to 27000 tr/mn	**12000**
Modify the time before starting up the pump	START	DELAY	0 to 59mn 59s	**0mn 0s**
Modify the maximum bearing operating time	BEARING	MAINT LIMIT	M=0 (5000 to 15000 h) M=1 (5000 to 30000 h) M=2 (5000 to 45000 h)	**0** **5000 h**
Modify the RS232 serial link	RS 232		(see details folio 3)	
Configure the 0-10V output	AN.OUT (ENTER)	Θ1 PUMP SPEED Θ CONV I.MOTOR	θ.PUMP 0.1V per 1°C 6,75V = 27000 tr/mn θ.CONV 0.1V per 1°C Current 10V for 15000mA	Θ TEMP.
Return to the factory configuration (Alcatel reserved)	RESET (ENTER)	CONTROLLER BEARING		
Modify the time before opening the air inlet valve	AIR INLET (ENTER)	DELAY	0 to 59mn 59s	**1s**
Modify the air inlet valve opening time		OPEN	0 to 59mn 59S	**1s**
Change to storage mode (the timer is blocked).	STOCK		ON / OFF	**ON***

* At power-up, the storage mode disappears automatically.

GB 00418 - Edition 02 - February 98

ACT 1000 T controller start-up

Serial link setting

RS232

ENTER + −

			Factory Configuration
Transmission speed	**SPEED**	300 600 1200 2400 4800 9600	**9600**
Data lenght	**DATA**	7 or 8	**8 bits**
Parity	**PARITY**	None Even Odd	**None**
Number of STOP bits	**STOP**	1 or 2	**1 bit**
Number of controller in a multiple link	**ADDRESS**	00 to 999	**0**
Authorizes or does not authorize the echo of characters received on the link	**ECHO**	ON or OFF	**ON**
Data separating character	**SEPARATOR**	1 to127	**44 (comma)**
Authorizes transmission at pre-set intervals on the serial link	**DATA LOG** ENTER **START**	ON or OFF	**OFF**
	DELAY	0 to 240mn 59 s	**1s**

PREVIOUS → Return to AN.OUT menu folio 2

GB 00418 - Edition 02 - February 98

Configuring the display screen

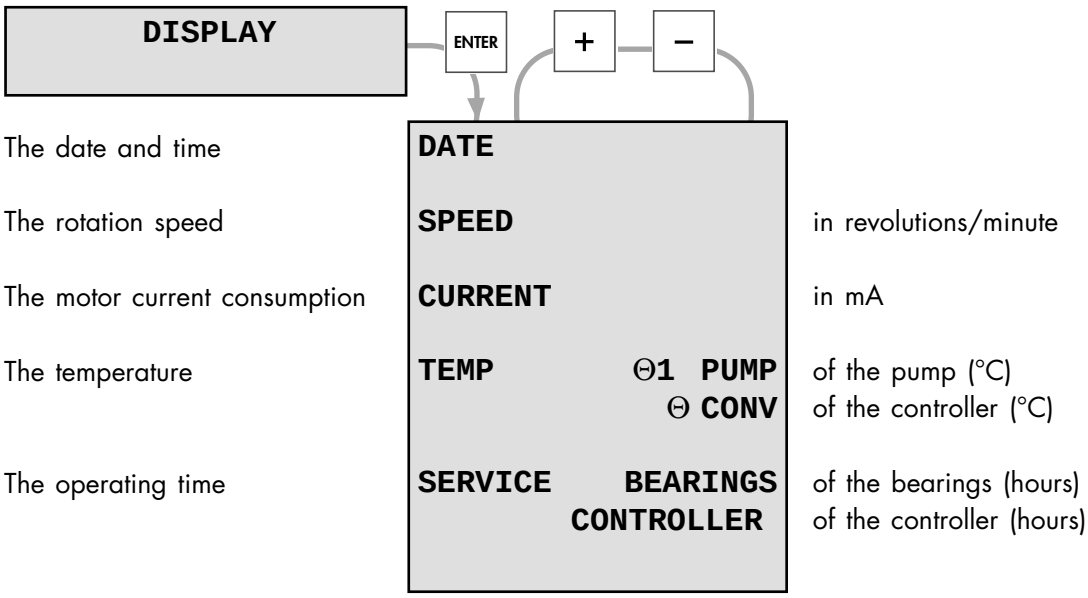

GB 00418 - Edition 02 - February 98

RS 232 or RS 485 serial link wiring

At the first power-up, the user finds the default configuration. The serial link parameters can be modified by accessing the corresponding unit menu.

The default configuration of the serial link is as follows:
- Type: **RS 232**
- Transmission speed: **9600 baud**
- Data length: **8 bits**
- Parity: **NONE**
- Stop bit: **1**

RS232/485 connector wiring

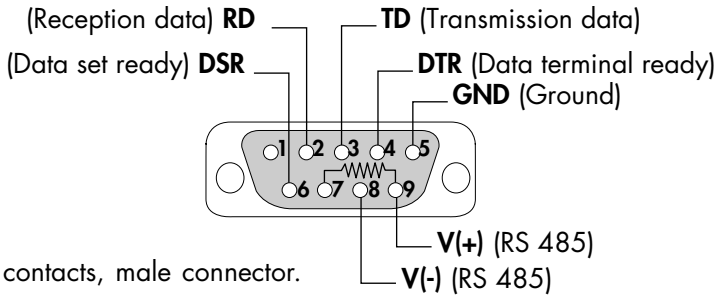

DB 9 contacts, male connector.

Connection examples:

RS232 type serial link with a single controller

Multiple RS232 serial link: several units (up to 255) can be controlled on a single link.

The multiple link is obtained by creating a loop:

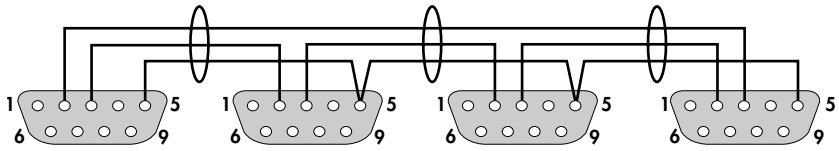

RS485 serial link connection:

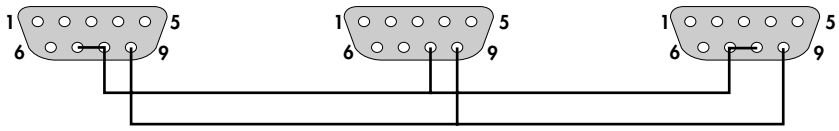

Connect terminals 7 and 8 when the controller is at the end of the line.

See ***B 120*** for the command and message reception syntax.

GB 00419 - Edition 01 - March 97

Detailed description of RS commands

(valid from V1.10 version variable drives)

Conventions applicable to the syntax of all commands:

adr = address, from 000 to 255
<CR> Carriage Return (ascii 13)
<LF> Line Feed (ascii 10); between square brackets: this character is not compulsory.

Status values

ok : command executed correctly

Error messages

Err0 : adjustment error (out of bounds)
Err1 : command error (syntax)
Err2 : parameter error (e.g. non-hexadecimal character)
Err3 : context error
Err4 : checksum error

ADR

Specifies the address of the device for networking.

Syntax

#adr**ADR**aaa<CR>[<LF>]

adr = address of the device before the command
aaa = new address of the device
condition : 000 ≤ aaa ≤ 255

Result

#aaa,ok or Err2

This command is used to allocate a specific number to each of the products making up a network (loop for RS 232 or parallel for RS 485).

Note : it is important to note down the number allocated to each device.

BRK

Stop the pump by braking (ATP 80/100 series only)

Syntax

#adr**BRK**<CR>[<LF>]

Result

#adr,ok

This command is used to brake the motor electrically, which is particulary effective at high speed. It is currently only available for the variable drive unit of the ACT 200T Board or ACT 200T cabinet.

GB 00420 - Edition 03 - March 00

Detailed description of RS commands

CKS Enables or disables reply strings checksum

Syntax #adr**CKS**ON<CR>[<LF>]

Enables ascii character checksum at the end of a reply string

or

#adr**CKS**OFF<CR>[<LF>]

Disables ascii character checksum at the end of a reply string

Result #adr,ok,**S** for CKSON
#adr,ok for CKSOFF

This feature allows the user to test if there is any transmit error with a reply string.
S is a character whose ascii value is the checksum, on 7 bits, of all the character ascii values from the beginning of the reply string to the character before **S**. The 8th bit of **S** (MSB, Most Significant Bit) is always 1.

CYC Starts the specified running-in cycle

Syntax #adr**CYC**1<CR>[<LF>] to start running-in program 1,
or
#adr**CYC**2<CR>[<LF>] to start running-in program 2

Result #adr,ok

Running-in program 1 should be executed after a pump maintenance operation (change of bearings).
At the end of the program, the pump maintenance parameters are updated and the «maintenance requested» alert can be cleared.
Program 2 is used after regreasing (ATP series only), or after prolonged storage (ATH 20/40 only).

GB 00420 - Edition 03 - March 00

Detailed description of RS commands

DLI — Defines the DataLogger transmission interval

Syntax #adr**DLI**xxx<CR>[<LF>]

xxx: DataLogger send interval in seconds
condition: 001 ≤ xxx ≤ 255

Result #adr,ok or Err2

See also: **DLR**

Note: if ok, the interval sent is stored in user memory.

DLR — Enables DataLogger operation (only with RS232)

Syntax #adr**DLR**<CR>[<LF>]

Result #adr,sssss,nnnnn,iiii,ttttt,uuuu.o,www,ppp,vvv

Returns current values:

- **sssss** : current speed (in tr/mn)
- **nnnnn** : speed set point (in tr/mn)
- **iiii** : current (in mA)
- **ttttt** : pump working speed (in hours)
- **uuuu.o** : (reserved)
- **www** : pwm (reserved)
- **ppp** : pump temperature (°C)
- **vvv** : variator temperature (°C)

The main characteristics of the pump and its controller are sent over the RS link, at the rate defined by the **DLI** command.

See also: **DLI, LNG, SEP, SHT**

Note: any new characters arriving on the serial port (RS 232) will cancel the automatic DataLogger transmission.

GB 00420 - Edition 03 - March 00

Detailed description of RS commands

ECH — Enables or disables command echoing

Syntax

#adr**ECH**ON<CR>[<LF>]
enables all characters received to be echoed over the serial port (RS 232 only).
or
#adr**ECH**OFF<CR>[<LF>]
disables all characters received from being echoed over the serial port.

Result

#adr,ok

Comments:
- This command is disabled in RS 485 operation, the value OFF is required.
- Using a loop-type RS 232 network requires «**ECH**ON» operation.

HDR — Defines the start character for a command reply string

Syntax

#adr**HDR**nnn<CR>[<LF>]
nnn: 3-digit decimal value of the ascii code of the corresponding character (with leading zeros).
condition : 020 ≤ nnn ≤ 255

Result

?adr,ok — ? is the desired character.
#adr,ErrX — if error

Allows the user to distinguish between the first character in a «command» string (for which # cannot be changed) and the first character of a «reply» string.
Affects the first character of ALL replies.
Default value: the hash sign, # (ascii code = 035)
If ok, the selected value is automatically stored in user memory.

IDN — Identifies the device which is communicating, and its software version

Syntax

#adr**IDN**<CR>[<LF>]

Result

#adr, VS.... - Vx.zz'
or
#adr, VS.... - Vx.zz for Alcatel pump type»

Returns the type of Variable drive Supervisor, the software version (x), the software edition (zz), and the type of pump for which this variable drive is set up.

GB 00420 - Edition 03 - March 00

Detailed description of RS commands

LEV — Returns the state of the parameters defined by SET

Syntax #adr**LEV**<CR>[<LF>]

Result #adr,nnnnn,sssss,aaaa,hhhhh *or*
#adr,nnnnn rpm,sssss rpm,aaaa mA,hhhhh hours

Returns the current values:

- **nnnnn** : speed set point
- **sssss** : stand-by speed set point
- **aaaa** : current set point
- **hhhhh** : alert level for pump bearing maintenance

Complete cabinet only:

Syntax #adr**LEV**10<CR>[<LF>]

Result #adr,nnnnn,sssss,hhhhh,g,ccccc,eeeee,ddddd,pppp,qqqq

Returns current values:

- **nnnnn** : nominal speed set point (in rpm)
- **sssss** : stand-by speed set point (in rpm)
- **hhhhh** : alert level for pump bearing maintenance (in hours)
- **g** : regreasing counter
- **ccccc** : pump working time (in hours)
- **eeeee** : electronic working time (in hours)
- **ddddd** : start delay (max 14459 s, that is 240 mn 59 s)
- **pppp** : time to venting (max 3599 s, that is 59 mn 59 s)
- **qqqq** : venting time (max 3599 s, that is 59 mn 59 s)

See also: **LNG, SEP, SHT**

LNG — Returns the strings sent with the identification sub-strings

Syntax #adr**LNG**<CR>[<LF>]

Result #adr,ok
CIT>

Allows the parameters returned by the DLR, LEV and SPD commands to be identified with sub-strings.
Also generates the «CIT>» prompt each time a <CR> character is received.

See also: **SHT**

GB 00420 - Edition 03 - March 00

Detailed description of RS commands

NSP — Swithes the speed set point to the nominal speed value

Syntax #adr**NSP**<CR>[<LF>]

Result #adr,ok

The speed set point for the pump is set to its nominal value.
This configuration is automatically saved in user memory.
This mode of operation prevents the use of the «**RPM**» command.

See also: **RPM, SBY**

OPT — Used to select possible user choices

Syntax #adr**OPT**1 n<CR>[<LF>]

choice of parameters on the analog output:

n = 0 : real pump speed
n = 1 : pump current
n = 2 : temperature of pump body
n = 3 : temperature of internal electronics

#adr**OPT2** n<CR>[<LF>]

choice of temperature unit:

n = 0 : degrees Centigrade
n = 1 : degrees Fahrenheit

Complete cabinet only:

#adr**OPT10** n<CR>[<LF>]

auto-starting:

n = 0 : yes
n = 1 : no

#adr**OPT11** n<CR>[<LF>]

buzzer: n = 0 : without
n = 1 : with

Result #adr,ok

See also: **SEL**

Comment: The choice of the temperature unit affects the results of the DLR and STA strings and the display (if cabinet fitted).

GB 00420 - Edition 03 - March 00

Detailed description of RS commands

RPM — Defines the speed set point in stand-by mode

Syntax #adr**RPM** nnnnn<CR>[<LF>] *or* #adr**RPM**nnnnn<CR>[<LF>]

Result #adr,ok *or* #adr,ErrX
1, out of range; 2, parameters ; 3, context (not in Stand-by mode)

See also: **NSP, SBY**

Comment: if ok, the new speed is automatically stored in user memory.

SAV — Saves the internal parameters in user's memory

Syntax #adr**SAV**<CR>[<LF>]

Result #adr,ok

Saves the current context (except for running-in cycles).
If this command is sent when the pump is being supplied, it can for example allow automatic re-start in the event of a power cut.

SBY — Switches the speed set point to the stand-by value

Syntax #adr**SBY**<CR>[<LF>]

Result #adr,ok

Resets the stand-by speed to its last stored value, and allows it to be modified if an «RPM» command is sent.
This configuration is automatically stored in user memory.

See also: **NSP, RPM**

GB 00420 - Edition 03 - March 00

Detailed description of RS commands

SEL — Returns the state of the parameters defined by OPT

Syntax #adr**SEL**<CR>[<LF>]

Result #adr,a,u

a : Returns choice of parameters on the analog output:
- a = 0 : real pump speed
- a = 1 : pump current
- a = 2 : temperature of pump body
- a = 3 : temperature of internal electronics

u : Returns the choice of temperature unit:
- u = 0 : degrees Centigrade u = 1 : degrees Fahrenheit

Complete cabinet only

Syntax #adr**SEL**10<CR>[<LF>]

Result #adr,a,u,s,b

a : Returns choice of parameters on the analog output:
- a = 0 : real pump speed
- a = 1 : pump current
- a = 2 : temperature of pump body
- a = 3 : temperature of internal electronics

u : Returns the choice of temperature unit:
- u = 0 : degrees Centigrade u = 1 : degrees Fahrenheit

s : Returns auto-starting choice:
- s = 0 : no s = 1 : yes

b : Returns buzzer choice:
- b = 0 : without b = 1 : with

SEP — Defines the character which separates the parameters in a reply

Syntax #adr**SEP**nnn<CR>[<LF>]

nnn: 3-digit decimal value of the ascii code of the desired character (with leading zeros).
condition : 000 ≤ nnn ≤ 255

Result #adr,ok *or* #adr,ErrX if error

Allows the user to select the character which separates the parameters returned by the **DLR**, **STA** and **LEV** commands. Default value: comma «,» ascii code = 044
If ok, the selected value is automatically stored in user memory.

GB 00420 - Edition 03 - March 00

Detailed description of RS commands

SET — Defines the internal operating parameters

Syntax

#adr**SET**1 hhhhh<CR>[<LF>] maintenance time
#adr**SET**2 sssss<CR>[<LF>] maximum time for start-up (future)

Complete cabinet only:

#adr**SET**10 ccccc<CR>[<LF>] : pump working time (in hours)
#adr**SET**11 eeeee<CR>[<LF>] : electronic working time (in hours)
#adr**SET**12 g<CR>[<LF>] : regreasing counter (0 to 2 max)
#adr**SET**13 ddddd<CR>[<LF>] : start delay (max 14459s, that is 240mn 59s)
#adr**SET**14 pppp<CR>[<LF>] : time to venting (max 3599s, that is 59mn 59s)
#adr**SET**15 qqqq<CR>[<LF>] : venting time (max 3599s, that is 59mn 59s)

Result #adr,ok *or* #adr,ErrX

See also: **LEV**

SHT — Returns the transmitted string without the identification sub-string

Syntax #adr**SHT**<CR>[<LF>]

Result #adr,ok

The strings sent following **DLR**, **LEV** and **SPD** commands will now be sent without the parameter identification sub-strings (e.g; without the units).

See also: **LNG**

SPD — Returns the current speed

Syntax #adr**SPD**<CR>[<LF>]

Result #adr,nnnnn
#adr,nnnnn rpm

See also: **LNG**, **SHT**

GB 00420 - Edition 03 - March 00

Detailed description of RS commands

STA — Returns the status of the internal dynamic parameters

Syntax #adr**STA**<CR>[<LF>]

Result #adr,xxxxxx,yyyyyy,zzzzzz,sssss,iiii,www,ppp,vvv,ttttt<CR><LF>

adr: address

543210
| | | | | |
xxxxxx status bits:
5 - RS echo (1->off)
4 - String long (0) / short (1)
3 - On (1) / Off (0)
2 - reduced or nominal speed reached(1)
1 - standby (1)
0 - running-in (1)

yyyyyy fault bits:
5 - variable drive temperature
4 - motor temperature
3 - excess current
2 - sensors or start-up
1 - external
0 - pump not connected

zzzzzz alert bits:
5 - reserved (future use)
4 - reserved (future use)
3 - variable drive temperature
2 - motor temperature
1 - start-up time exceeded (future)
0 - operating time exceeded

sssss current speed value in rpm
iiii current value in mA
www reserved (pwm value)
ppp pump temperature value
vvv variable drive temperature
ttttt pump operating time value

Reminder : The «#» character at the start of the reply string can be set with the «HDR» command. The «,» character which separates the parameters in the reply string can be modified with the «SEP» command.

TMP — Defines the operating state of the turbomolecular pump

Syntax #adr**TMP**ON<CR>[<LF>] start pump rotation
#adr**TMP**OFF<CR>[<LF>] stop pump

Result #adr,ok *or* #adr,Err3 if the pump is already in the state requested (context error)

GB 00420 - Edition 03 - March 00

Functions of integrable controllers Brick and Board type

Warning

Electronic boards have been designed to comply with the electrical safety and electromagnetic compatibility rules but they cannot be the purpose of a certification as soon as they are sold alone.
It is the user responsibility to ensure the externals shields which are necessary to be in compliance with ECM and electrical safety rules

Serial link RS 232/485

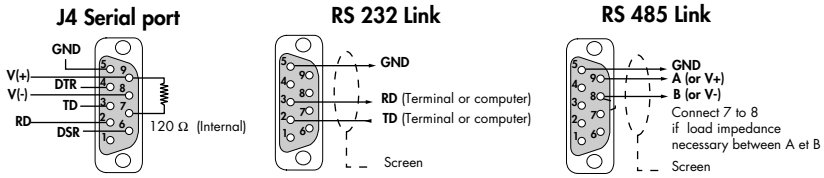

Setting

Using the switch S3 :

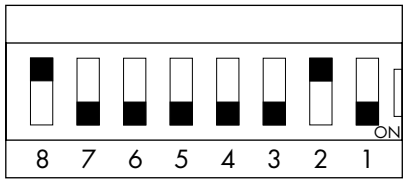

Factory configuration : 9600 Bauds, WITHOUT Parity, 8 bits, 1 Stop bit, RS232.

	Switch	ON	OFF
Number of STOP bits	1	1 bit	2 bits
Data length	2	7 bits	8 bits
Parity (Valid if switch 4 is off)	3	ODD	EVEN
	4	SANS	AVEC
Type of link	8	RS 485	RS 232

		Switch	
		5	6
Transmission speed	9600	ON	ON
	4800	OFF	ON
	2400	ON	OFF
	1200	OFF	OFF

Operation

Refer to the Commands details sheet (***B 120***).

Rotation speed setting

The potentiometer R15 (*See folio 4*) has to be set to a position such as not to exceed the 1/5 of its full excursion to allow the speed programming from the serial link.

GB 00421 - Edition 03 - March 00

Functions of integrable controllers Brick and Board type

Inputs/Outputs connector

This remote control allows to command START, STOP, STANDBY at distance, and the copy of the monitoring parameters .

The connection is done on a female connector 3M He 10 P.N. 34-52-6000 (Not supplied).

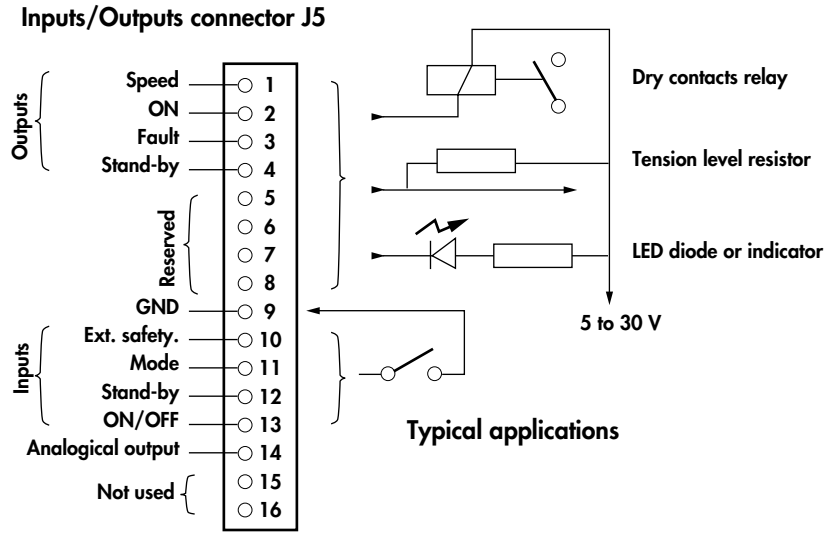

Output contacts signalisation :

They are open collector type outputs (Imax 100mA; Vmax 30V) whose function is to copy the information related to the pump status.

The light indicator is on when the corresponding output is valid (low level).

Light	Contact		Description	Light indicator status
Green	**Speed**	**1**	Nominal speed has been reached by the pump.	**Flashing** : The speed is higher than the one selected. **Lit** : The selected speed is reached.
Yellow	**Start**	**2**	The pump is starting up.	**Lit** : The speed is lower than the one selected.
Red	**Fault**	**3**	A fault occurs.	**Lit** : Faulty pump. *(See folio 4)* **Flashing** : Alert is signalled.
Yellow	**Stand-by**	**4**	Standby mode is selected.	**Lit** : Standby mode is selected.

GB 00421 - Edition 03 - March 00

Functions of integrable controllers Brick and Board type

Command inputs The input is regarded as valid when the external contact which is connected is closed (Low level: ground connected) and not valid if the contact is open (High level).

	Contact	Input status	
External safety	**10**	**High:** There is an external safety. The LED Fault is lit on, the pump doesn't start. **Low:** Contact connected to ground, necessary for pump's starting.	
Mode	**11**	**High:** "Status" mode selected. **Low:** "Impulse" mode selected. This mode is valid for the two following commands .	
Stand-by	**12**	"Status" mode: **High:** Nominal rotation speed mode . **Low:** Reduced rotation speed mode selected. (stand-by) **Nominal speed** **Std-by**	"Impulse" mode: A temporary closing of the contact allows to alternate the reduced and nominal speeds. **Std-by** **Nominal speed**
Start/Stop	**13**	"Status" mode: **High:** The pump is no longer powered. **Low:** The pump starts and accelerates. **Stop** **Start**	"Impulse" mode: A temporary closing of the contact allows to alternate between Start and Stop of the pump. **Start** **Stop**

One analog output

Analog output	**14**	This output allows to monitor the evolution of some pump parameters (Speed, température…).

The output parameter selection is done through the RS 232 ***(See B120)***. The speed, the current, the temperatures are available on this output (Factory configuration «Speed»).

GB 00421 - Edition 03 - March 00

Functions of integrable controllers Brick and Board type

Rotation speed setting

The potentiometer R 15 allows to set the rotation speed as long as its position is further than 1/5 of the full excursion.

From the maximum position (Fully clockwise screwed), the speed is defined:
- by the orders comming from serial link during the 4 first turns (counterclockwise unscrewing) ;
- manually within the limits of stand-by speed range (See characteristics table), this after the 5th turn (Speed increases when unscrewing).

Factory configuration: R15 is set for a serial link configuration with a Standby speed of 12000 RPM.

Faults monitoring

The alerts are indicated by:
- The flashing of the red light indicator ;
- The alternation of HIGH and LOW levels of the output «FAULT».

The faults are indicated by:
- The lighting of the red light indicator ;
- The switching to the Low level of output «FAULT».

They can be identified using the serial link (***See B120***, command STA).

Note: Alcatel can provide upon request, a communication software which allows pump control and monitoring using a micro-computer (*see C 61*).

Refer to Diagnosis and Troubleshooting of the manual.

GB 00421 - Edition 03 - March 00

Functions of integrable controller OEM Board type

Warning

Electronic boards have been designed to comply with the electrical safety and electromagnetic compatibility rules but they cannot be the purpose of a certification as soon as they are sold alone.
It is the user responsability to ensure the externals shields which are necessary to be in compliance with ECM and electrical safety rules.

Local mode operation

Power "ON" and pump "Start/Stop" functions are made using switches located on the PC Board.

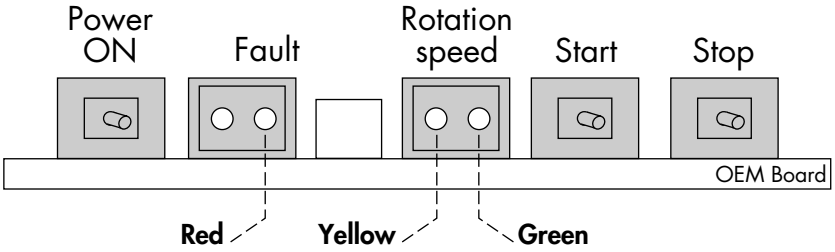

The detection of the pump operation is materialized by three indicator lights (green, yellow, red) which indicate the pump status (light ON = 1; Light OFF = 0).

Detection of rotation

	Action on button		Pump motor powered	Pump rotation speed*	Pilot lights		
	START	**STOP**			**Yellow**	**Green**	**Red**
1 Before starting	**0**	**0**	**NO**	**0**	○	○	○
2 Starting	**1**	**0**	**YES**	**< 27000**	✳	○	○
3 Pump at nominal speed	**0**	**0**	**YES**	**= 27000**	○	✳	○
4 Incident** Overheating due to pump or converter	**0**	**0**	**NO**	↘ **0**	✳	○	✳
5 Overloading	**0**	**0**	**YES**	**< 27000**	✳	○	○
6 Pumping stop	**0**	**1**	**NO**	↘ **0**	○	○	○

* Pump rotation speed in rpm.
** During the pump or converter cooling, the cycles 2,3 (or 5) will be happened again periodically until the user remedies the overheating.

GB 00422 - Edition 02 - March 00

Functions of integrable controller OEM Board type

Remote control mode

Depending on P2 power supply cable connector wiring, the pump Start/Stop and an external safety can be remote controlled.

J3 connector allows the copy of the pump status data (equivalent to light indicators green-red-yellow) (***voir folio 1***).

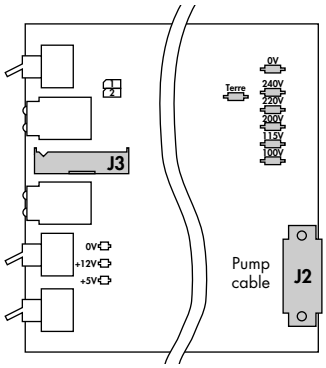

	Description	P2 connector wiring*
Without remote control outer safeties	Standard wiring. **A4-A5** : output by contact ON/OFF	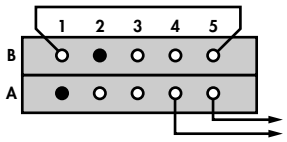
Pump Start/Stop remote control (by impulse contacts)	Buttons command. The buttons of the front of panel are operational.	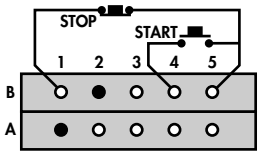
Pump Start/Stop remote control (by maintained contact)	Interrupter command. Closed contact: pump starts Opened contact: pump stops	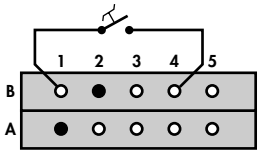
Outer safety switch wiring	Opened contact: pump stops No indication by the red LED.	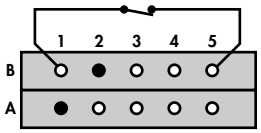
Outer control	**A4-A5** terminals allows to switch 250 V - 1 A max.	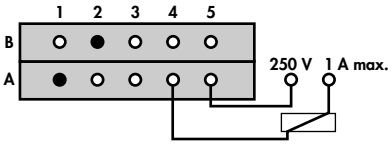

* P2 soldering side view;
B2 and A1 in black are female pins, others are male pins.

GB 00422 - Edition 02 - March 00

Functions of integrable controller OEM Board type

Fault monitoring

The faults are indicated by red light indicator which signals:
- controller temperature increasing;
- pump temperature increasing;
- incorrect connection between pump and PC Board.

When it is “ON”, the motor is not supplied and the pump doesn’t run.

GB 00422 - Edition 02 - March 00

Chapter C

ATP User's Manual

Operation

GB 00423 - Edition 09 - February 99

First pump start-up
Safety instructions

First pump start-up

When the pump is new, or after a prolonged shut-down of 3 months or more (under normal storage conditions), Alcatel recommend operating the pump at atmospheric pressure for 10 minutes (inlet and exhaust open to atmosphere) in order to ensure a slow rotation and grease re-distribution in the pump ball-bearings.
For this operation, inlet and pump exhaust are open to atmosphere.

⚠ The access to the rotor of a turbomolecular pump with an unconnected inlet is dangerous.

Safety instruction for use

⚠ The pumps are designed so as not to present a thermal risk for the user's safety. However, specific operating conditions can generate temperatures which require particular care to be taken by the user (external surfaces > 70°C).

⚠ Avoid moving or causing a shock on a pump in operation.
There is a risk of seizing if the pump rotates in an axis perpendicular to its axis of rotation.

GB 00424 - Edition 01 - March 97

Turbomolecular pump operation in a pumping application

When the pump is new, or after a prolonged shut-down of 3 months or more (under normal storage conditions), Alcatel recommend operating the pump at atmospheric pressure for 10 minutes (inlet and exhaust open to atmosphere) in order to ensure a slow rotation and grease re-distribution in the pump ball-bearings.

Example of a 1 valve assembly

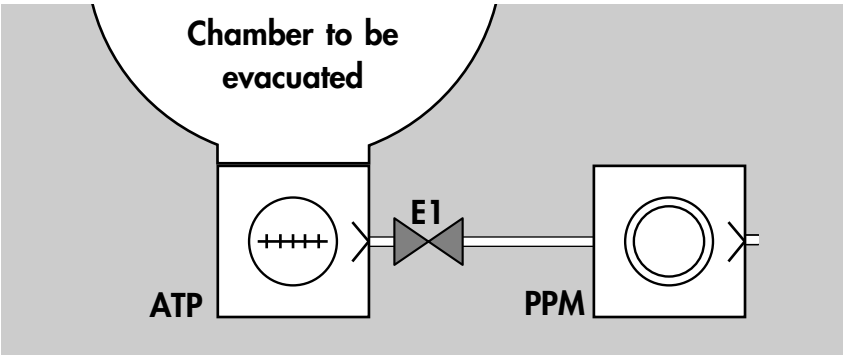

The chamber and pipes are at atmospheric pressure, the pumps are switched off, the valves are closed

Start-up:
- start up ATP water cooling system;
- open the E1 valve;
- start up the primary pump (PPM);
- start up the ATP, when the pressure in the chamber is ≤ 1 mbar.

Stop:
- close E1;
- stop the primary pump;
- stop the ATP;
- stop the cooling system.

GB 00425 - Edition 01 - March 97

Turbomolecular pump operation in a pumping application

Example of a 3 valve assembly

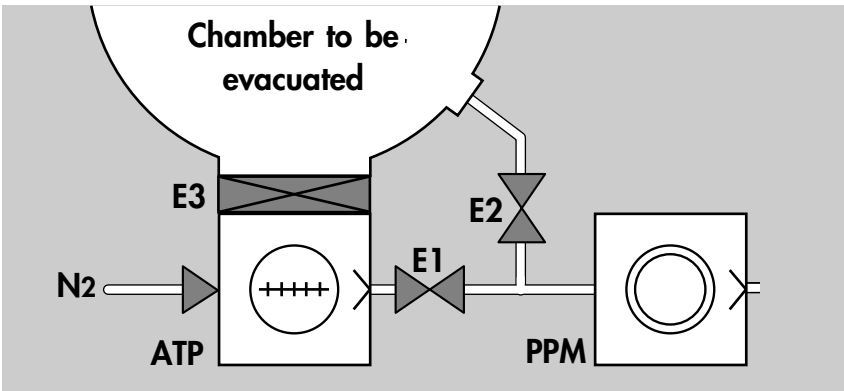

* N2 purge only for "C" and "HPC" models

The chamber and pipes are at atmospheric pressure, the pumps are switched off, the valves are closed

Pre-evacuation of the chamber:
- start up the PPM (primary pump);
- start up the ATP water cooling system;
- open the E2 valve.

The pressure in the chamber ≤ 1mbar, the secondary pumping can be started up:
- close E2;
- open E1 and E3;
- start up the nitrogen purge*;
- start up the ATP.

The chamber is at atmospheric pressure, the pumps are operating, the valves E2 and E3 are closed, the purge and water circuits are operating.

Pre-evacuation of the chamber:
- close E1;
- open E2.

The pressure in the chamber is ≤ 1mbar:
- close E2;
- open E1;
- open E3.

GB 00425 - Edition 01 - March 97

Turbomolecular pump operation in a pumping application

Refill the chamber with air

Shut off the pumps by closing the E3 valve (E1 remains open) and open an air inlet on the chamber.

Stop pumping

The pumps are shut off by closing the valves.
- close the E3 valve;
- with the ATP and PPM rotating, allow the N2 purge* to flow approximately 1 hour after pumping corrosive gases*;
- Stop the ATP;
- Close the E1 valve;
- Stop the PPM. The ATP will be refilled with air if the accessory is fitted and the relevant menus are programmed (see ***B 70*** or ***B 100***);
- stop the water cooling circuit.

Bake-out collar (accessory) operation:

To reach the vacuum limit quickly, the ATP can be baked.
In this case, the temperature on the pump inlet flange must be monitored:
T < 120°C.

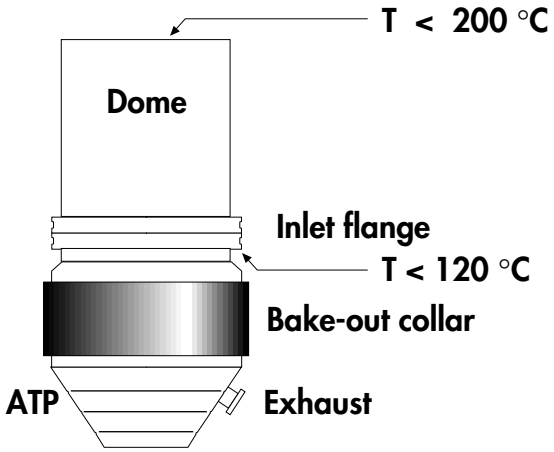

GB 00425 - Edition 01 - March 97

Controlling the pump using the controller front panel

Rotation indicator lights:

Orange lit
The pump rotation speed is **lower** than the selected speed.

Red lit
The pump is faulty.
This fault is accompanied by an audible signal (if it is programmed).

Green flashing
The pump rotation speed is **higher** than the selected speed (decrease of the selected speed during operation).
Green lit
The pump has reached the selected speed.

Orange lit
Standby mode selected
Orange flashing
Running-in procedure activated

Start-up the pump by pressing START

The pump is started up to reach the selected speed.

The orange rising speed indicator light comes on. When the pump reaches its selected speed, the orange indicator light goes off and the green indicator light comes on.

Select the reduced speed rotation mode by pressing STAND BY

The speed selection indicator light comes on. The pump regulates its speed to reach the value of the programmed reduced speed (see ***B 70*** or ***B 100***).

Stop the pump by pressing STOP

The rotation speed monitoring indicator lights go off. The pump motor is no longer powered, the pump decelerates.

GB 00426 - Edition 01 - March 97

Controlling the pump using the controller front panel

Air inlet valve accessory

The valve is automatically controlled during a voluntary stoppage of the pump if a value other than zero has been programmed in the "Venting Time" menu. During the entry of air, the pump can be started up but the valve will be closed beforehand.
In the event of a power cut, the valve is opened immediately, without delay, even if it has been programmed at a value other than zero.

Delayed start-up

It is possible to control the start-up of another pump before the start-up of the turbomolecular pump. Simply program a time other than zero in the "SET START DELAY" menu. When START is pressed, the backing pump is started up and the ATP is controlled after the delay.

GB 00426 - Edition 01 - March 97

Displaying the data concerning ACT 200 T and ACT 600 T pumping

Displaying the data concerning the pumping

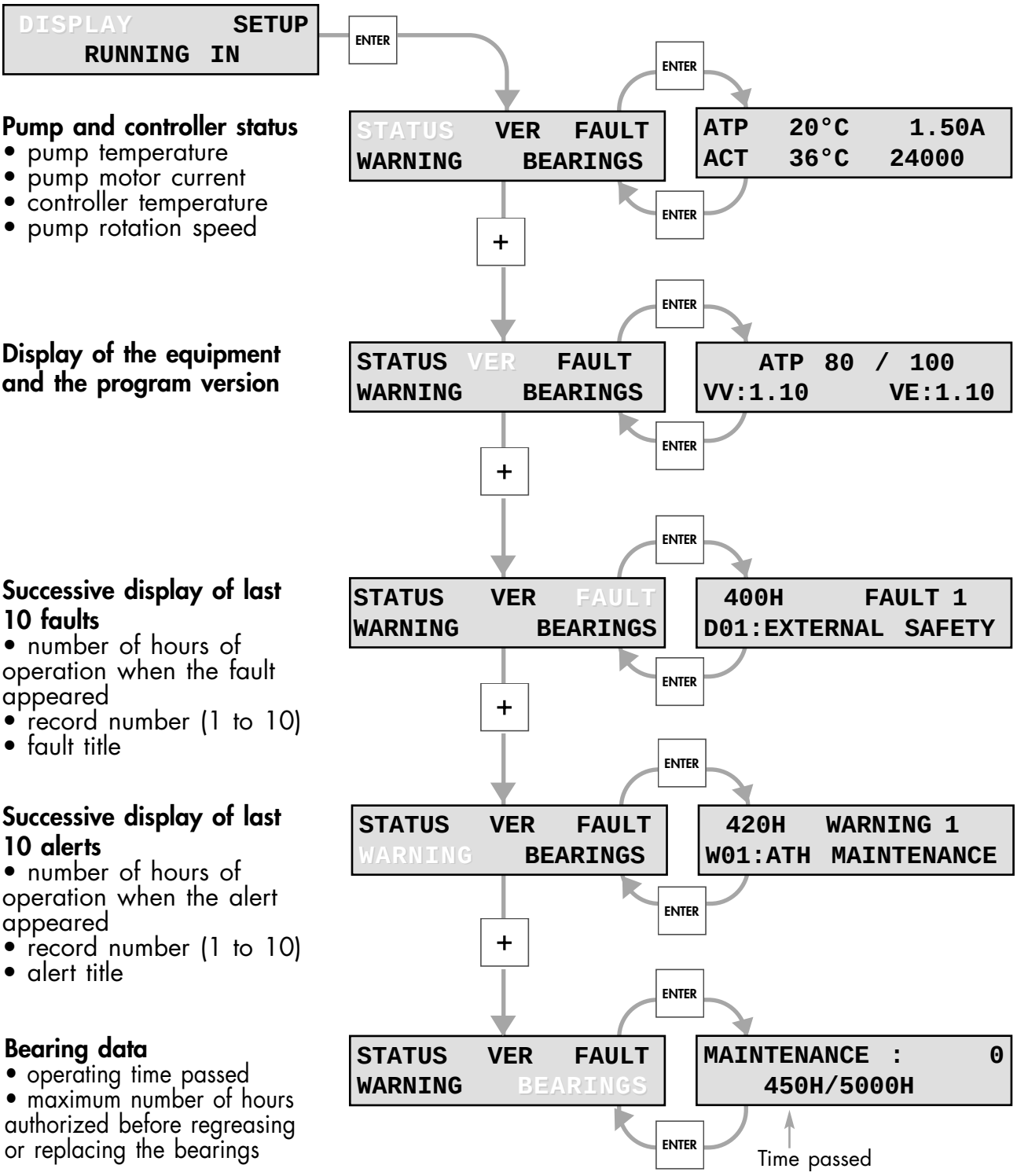

Pump and controller status
- pump temperature
- pump motor current
- controller temperature
- pump rotation speed

Display of the equipment and the program version

Successive display of last 10 faults
- number of hours of operation when the fault appeared
- record number (1 to 10)
- fault title

Successive display of last 10 alerts
- number of hours of operation when the alert appeared
- record number (1 to 10)
- alert title

Bearing data
- operating time passed
- maximum number of hours authorized before regreasing or replacing the bearings

GB 00427 - Edition 02 - February 99

ACT 200 T and ACT 600 T "Remote Control" connector "Ext. safety" input operation

This input, which can be used to control an external contact safety device for the ACT controllers, is controlled in 2 different ways depending on the value given to the **SET START DELAY** parameter accessible in the configuration menus.

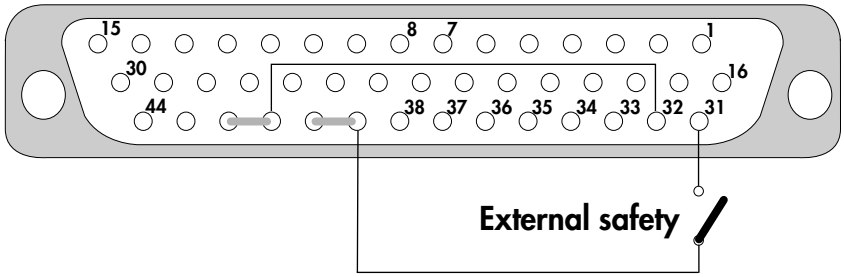

If **SET START DELAY = 0**

The external safety input is controlled continuously.
If the “external safety” contact is open, it displays the fault **"EXTERNAL SAFETY"**, lights up the red fault indicator light and inhibits the pump start-up. The output contact **7-8** is kept open.

If **SET START DELAY ≠ 0**

- Before pressing on **"START"**,
  the external safety input is not controlled.

- After pressing on **"START"** and during a delay
  - of 4 seconds if **SET START DELAY > 4 s**
  - or between 1 and 4s if **SET START DELAY ≤ 4 s**
  the external safety input is not controlled.

- After this delay, this input is handled by the ACT.
  If the “external safety” contact is open, it displays the fault **"EXTERNAL SAFETY"**, lights up the red fault indicator light, opens the output contact **7-8** and inhibits the pump start-up.
  This contact can be used to control the roughing pump (see wiring example, following page).

Note: In "REMOTE" mode, after an external fault, the pump must be set to the "STOP" status before starting up again.

GB 00428 - Edition 02 - February 99

ACT 200 T and ACT 600 T "Remote Control" connector "Ext. safety" input operation

Wiring example to control a roughing pump

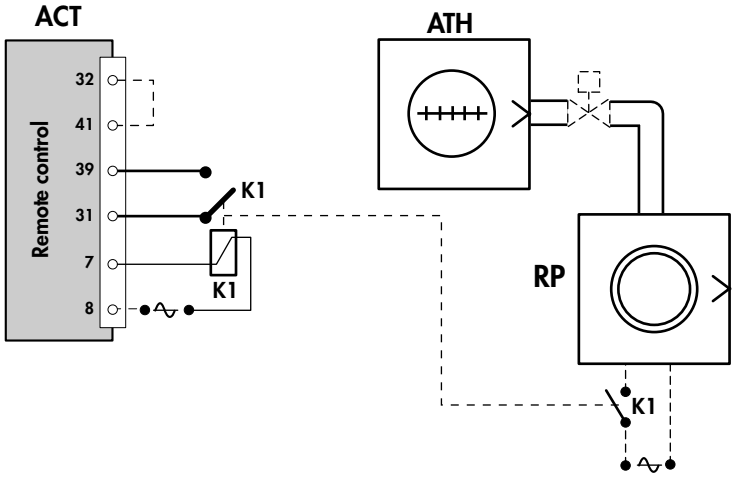

GB 00428 - Edition 02 - February 99

Controlling the pump using communication software

These instructions are validated for ACT 200/200T/600T, cabinet, Board and Brick version.

Connect the controller to the micro-computer (or terminal)

Realize the necessary connections (***see B 110***).

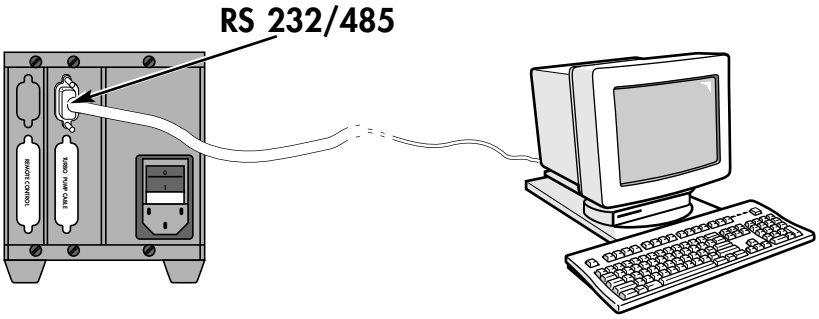

PC system requirements

Communication software is compatible with **Windows 3.11, 95 et Windows NT** (™ Microsoft).
It require 2 Mo RAM. Communication ports 1 to 4 must be available.

This application is available on CDRom or Floppy disk 3"1/2.
Consult us.

GB 00429 - Edition 01 - February 99

Chapter D

ATP User's Manual

Maintenance

GB 00430 - Edition 08 - February 98

Diagnosis and troubleshooting ACT 200 T and ACT 600 T

Default type:

"Warning" Wxx The "FAULT" signal flashes;
If the buzzer is selected "ON", it is activated;
The controller doesn't stop the pump.

"Fault" Dxx The "FAULT" signal lights on;
If the buzzer is selected "ON", it is activated;
The controller stops the pump.

INCIDENT	CAUSE	CONSEQUENCE	REMEDY
No event occurs after power on: **• No display;** **• Indicators does not light.**	• No mains current in the unit. • Defective power cable. • Fuses.	The controller is not powered.	• Change the power cable. • Check the fuses. • Call the ALCATEL Customer Service.
Incoherent display Inoperative Keyboard (At starting or during the pumping)		The display is different from «Ready to start !»	• Call the ALCATEL Customer Service.
No light switches on	Defective lights.	The pump can be used without indicators.	• Call the ALCATEL Customer Service.
The pump isn't running (pump seizing) No messages	Cell seizing.	No message. Check the pump status. 200T : Imax = 1.2 A 600T : Imax = 0.8 A Rotation speed : 0 rpm The controller temperature is increasing and the warning «ACT TEMP» can appear (65°C)	• Check the pump rotation (manually). • Make the pump maintenance. • Call the ALCATEL Customer Service.

GB 00431 - Edition 01 - March 97

Diagnosis and troubleshooting ACT 200 T and ACT 600 T

INCIDENT	CAUSE	CONSEQUENCE	REMEDY
WO1 : GREASING	The authorized limit for ball bearing maintenance time has been reached. (M=0 or M=1)		• Regrease the pump and initialize the maintenance counter (see ***E 80***).
WO2 : PUMP MAINTEN.	Pump maintenance time will be reached.	Bearing must be changed.	• Call the ALCATEL Customer Service.
WO3 : ACT TEMP.	The controller temperature is high between: - 60 and 70°C for ACT 600 T; - 65 and 75°C for ACT 200 T; but does not exceed the authorized limit.		• Check the controller cooling circuit: - Internal fan for ACT 600T; - Ventilation for ACT 200T.
W04 : PUMP TEMP.	Pump temperature is between 75 and 85°C.		• Check the pump ventilation.

GB 00431 - Edition 01 - March 97

Diagnosis and troubleshooting ACT 200 T and ACT 600 T

INCIDENT	CAUSE	CONSEQUENCE	REMEDY
D01 : EXT SAFETY	The external security contact on the REMOTE CONTROL connector is activated.	The controller stops the motor. The pump can't restart.	• Test the external safety devices (contact 31 - 32); • Repair the fault and press START to restart (see B 60)
D02 : DLY SOFTWARE	Soft counter default.		• Reinitialize the controller with the main switch (0/1); • If the fault happens again, call the ALCATEL Customer Service.
D03 : ACT TEMP.	Controller temperature exceeds the authorized limit 70°C for ACT 600T or 75°C for ACT 200T		• Check that the cooling circuit is operating correctly: - Internal fan for ACT 600T; - Ventilation for ACT 200T.
D04 : PUMP TEMP.	The pump motor temperature exceeds the authorized limit 85°C.		• Check that the cooling circuit is operating correctly; • Reduce the working pressure or the flowrate. • If the fault happens again, call the ALCATEL Customer Service.
D05 : HALL SENSORS	Not used.		
D06 : START FAULT	Not used.		
D07 : PUMP CURRENT	Motor overcurrent or Hall sensor default.	Starting current too high.	• Reinitialize the controller with the main switch (0/1); • If the fault happens again, call the ALCATEL Customer Service.
D08 : NO CONNECT	Pump not connected.	The pump can't start up.	• Check the cable connection.
D09 : HIGH PRESS.	Not used.		

GB 00431 - Edition 01 - March 97

Diagnosis and troubleshooting ACT 1000 T

When a defect appears

The "FAULT" indicator lights, the air inlet valve and/or the "FAULT" contact on the "Remote Control" connector are activated.

In the following table, we use the signs:
Y Relay contact open;
N Relay contact closed;
□ "FAULT" indicator lit on;
■ "FAULT" indicator lit off.

INCIDENT	CAUSE	17-18	13-14 & 11-12	FAULT	CONSEQUENCE	REMEDY
No event occurs after power on: **• No display;** **• Indicators does not light.**	• No mains current in the unit. • Defective power cable. • Fuses.			■	The controller is not powered.	• Change the power cable. • Check the fuses. • Call the Alcatel Customer Service.
D00 : SEIZED PUMP	Cell seized.	**Y**	**N**	■	Check the pump status: 0RPM.	• Check the pump rotation (manually). • Make the pump maintenance. • Call the Alcatel Customer Service.
D01 : POWER OVERHEAT	Overheat signal by the «powered» sensor in the unit.	**Y**	**N**	■	The controller stops temporarily the motor. Valves are not affected.	• Check the controller cooling circuit (Air admissions and fan). • Call the Alcatel Customer Service.
D03 : MOTOR CONTROL OVERHEAT	Overheat signal by the «dimmer switch» sensor in the unit.	**Y**	**N**	■	The controller stops temporarily the motor. Valves are not affected.	• Check the controller cooling circuit (Air admissions and fan). • Reduce the working pressure or the flowrate. • Call the Alcatel Customer Service.
D04 : HALL SENSOR	• Hall sensor default. • Motor out of order. • Pump no connected.	**Y**	**Y**	□	The controller stops the motor. Valves are affected and the pump can't restart.	• Check the cable connection. • Call the Alcatel Customer Service.

GB 00432 - Edition 01 - March 97

Diagnosis and troubleshooting ACT 1000 T

INCIDENT	CAUSE	17-18	13-14 & 11-12	□FAULT	CONSEQUENCE	REMEDY
D05 : OVERCURRENT OR SENSOR	• Motor overcurrent or hall sensors default. • Motor out of order. Pump no connected.	**Y**	**Y**	□	The controller stops the motor. Valves are affected and pump can't restart.	• Check the cable connection. • Call the Alcatel Customer Service.
D06 : EXT. SAFETY	The external security contact on the connector is activated.	**Y**	**Y**	□	The controller stops the motor. Valves are affected and pump can't restart.	• Test the external safety devices (contact 1 - 2); • Repair the fault and press START to restart.
D21 : PUMP OVERHEAT	Pump overheat.	**Y**	**N**	■	The controller stops the motor. Valves are not affected.	• Check the pump cooling. • Reduce the working pressure or the flowrate.
D22 : CONTROLLER OVERHEAT	Overheat signal by the «management» sensor in the unit. T > 60°C.	**Y**	**N**	□	The controller stops the motor. Valves are not affected.	• Check the controller cooling circuit (Air admissions and fan). • Reduce the working pressure or the flowrate. • Call the Alcatel Customer Service.
D23 : HOT PUMP	Pump temperature exceeds 75°C.	**N**	**N**	■	Fault is displayed (message).	• Check the pump cooling. • Reduce the pressure or the flow. • If the default is still present the D21 appears.
D24 : BEARINGS MUST BE CHANGED	The bearing life time has been reached.	**N**	**N**	□	The «fault» signal flashes.	• Change the emergency bearings; • Call the Alcatel Customer Service.
D26 : NO CONNECT	• Temperature probe failure. • Pump no connected. • Sensor no connected.	**Y**	**Y**	□	The controller stops the motor. Valves are not affected.	• Check the cable controller electrical connection. • Call the Alcatel Customer Service.

GB 00432 - Edition 01 - March 97

Diagnosis and troubleshooting ACT 1000 T

INCIDENT	CAUSE	17-18	13-14 & 11-12	□FAULT	CONSEQUENCE	REMEDY
D27 : DATE AND TIME	• Converter memory problem. • STOCK Parameter activated.	**N**	**N**	■	The controller supplies power to the pump but the display is incorrect.	• Access the DATE menu and update the new date. • Reinitialize the controller with the main switch (0/1) • Call the Alcatel Customer Service.
D28 : DISABLE EEPROM WRITE	Writing memory problem on the management card.	**N**	**N**	■	The controller supplies power to the pump but the data are not saved.	• Reinitialize the controller with the main switch (0/1) • Call the Alcatel Customer Service. • Contacter le Service Client.
D29 : INPUT POWER	• Mains power failure. • Problem on the 72V power supply.	**N**	**Y**	■	The pump is not powered and generate power to the controller. The defect appears briefly before the power cut.	• Check the cable connection to the pump and controlle. • Check the fuses. • Call the Alcatel Customer Service.
D30 : EEPROM CHECKSUM	Reading memory problem on the management card.	**N**	**N**	□	The controller stops the motor.	• Call the Alcatel Customer Service.
D37 : GREASING BEARING	The bearing relubricated time has been reached.	**N**	**N**	□	The «fault» signal flashes.	• Make the relubrication and reinitialize the maintenance counter.

GB 00432 - Edition 01 - March 97

Diagnosis and troubleshooting ACT 1000 T

INCIDENT	CAUSE	CONSEQUENCE	REMEDY
ACT 1000 T V2.X ---------- PUMP MEMORY FAULT	When the controller is started up, the pump cannot be identified.	The controller is help up.	• Call the ALCATEL Customer Service.
■■■■■■■■■■■■■■■■■■■■ ■■■■■■■■■■■■■■■■■■■■ ■■■■■■■■■■■■■■■■■■■■ ■■■■■■■■■■■■■■■■■■■■	Converter power supply problem.	The controller is blocked.	• Call the ALCATEL Customer Service.
■■■■■■■■■■■■■■■■■■■■ ■■■■■■■■■■■■■■■■■■■■	The micro board is not working.	The controller is not working.	• Call the ALCATEL Customer Service.
ACT 1000 T V2.X ---------- WDOG CONVERTER	The microprocessor is running on itself: it is not able to control the operating sequency.	Momentaneaously, the controller is not working.	• If the speed is zero when the message appears, wait for the message disappiars and try again the starting procedure. • If the speed is not zero, wait for running stops and start again the pump. • If the message continues, call the ALCATEL Customer Service.

GB 00432 - Edition 01 - March 97

ATP 80, ATP 100, ATP 150, ATP 400 Maintenance frequency

Intervals for relubrication and the ball bearings replacement depend on the type of process used.

Housing temperature measuring point

ATP 80
ATP 100

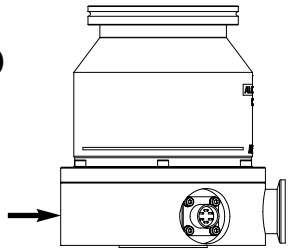

ATP 150
ATP 400

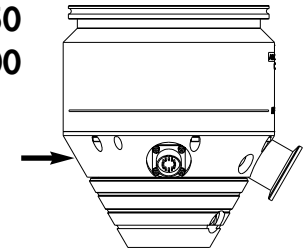

Use of the pump

—— In continuous operation, at ultimate pressure, no process.

- - - - In cycle less than 1 hour, at maximum inlet pressure, no process.

—·— In cycle less than 1 hour, at maximum inlet pressure, with chlorinated or fluorine process.

Pump curve:
ATP 80 - ATP 80 C
ATP 100 - ATP 100 C
ATP 150 - ATP 150 C
ATP 400 - ATP 400 C
ATP 400 HPC

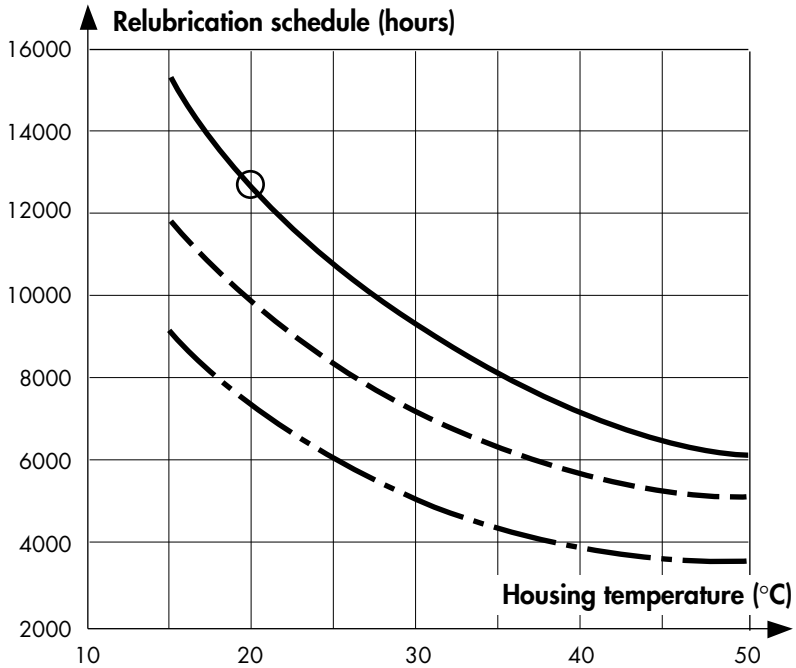

Example

For use at 20°C housing temperature, in continuous operation, at ultimate pressure,
the maintenance frequency is **13000h** (t).

t	**13000h**	1st lubrication	M*=0
t x 2	**26000h**	2nd lubrication	M*=1
t x 3	**39000h**	Disassemble the pump, replace and condition the ball bearings	M*=2

*Maintenance counter

GB 00433 - Edition 01 - March 97

ATP 900
Maintenance frequency

Intervals for relubrication and the ball bearings replacement depend on the type of process used.

Housing temperature measuring point

ATP 900

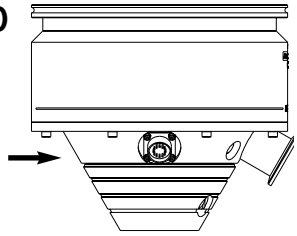

Use of the pump

—— In continuous operation, at ultimate pressure, no process.

- - - - In cycle less than 1 hour, at maximum inlet pressure, no process.

—·— In cycle less than 1 hour, at maximum inlet pressure, with chlorinated or fluorine process.

Pump curve: ATP 900 - ATP 900 C ATP 900 HPC

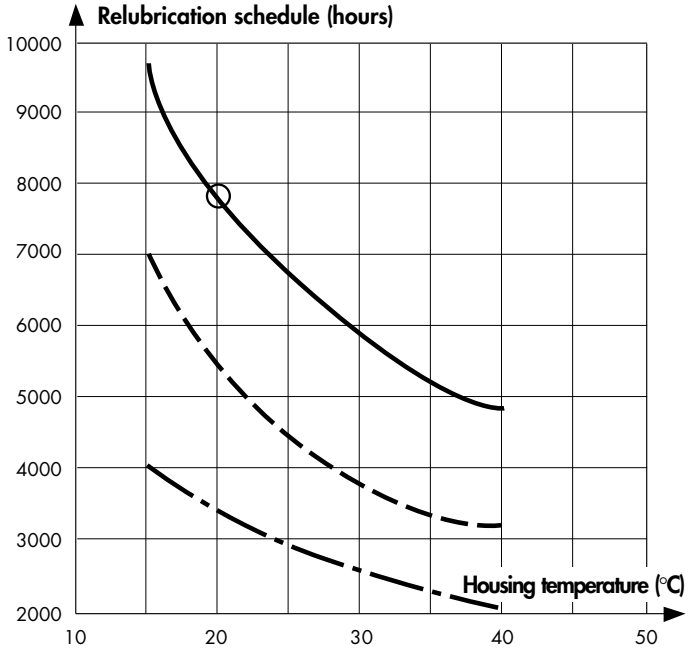

Example

For use at 20°C housing temperature, in continuous operation, at ultimate pressure,
the maintenance frequency is **8000h** (t).

t	**8000h**	1st lubrication	M*=0
t x 2	**16000h**	2nd lubrication	M*=1
t x 3	**24000h**	Disassemble the pump, replace and condition the ball bearings	M*=2

*Maintenance counter

GB 00434 - Edition 01 - March 97

Chapter E

ATP User's Manual

Operation sheets

GB 00435 - Edition 08 - February 98

* These chapters are included into the ball bearing replacement manual delivered with the specific tool.

E 10

Precautions before maintenance

It is important to isolate the machine from the electrical power supply source before any intervention inside the equipment (for maintenance reasons).

Before any maintenance operation, check the pumping conditions of the installation: toxicity, possible corrosion of the pumped gases. Depending on the case, we recommend:
- to purge the pumping installation with dry nitrogen before any intervention;
- to wear gloves, goggles and breathing masks, if necessary;
- to ventilate the room well and disassemble the equipment under a fume hood.

After a complete maintenance operation, it is recommended to perform a helium leaktightness test.

Similarly, follow all the safety instructions concerning start-up.

GB 00437 - Edition 01 - March 97

ATP 80 and ATP 100
Pumps lubrication

The first lubrication required for the correct operation of ATP pumps is performed in the factory. Subsequent lubrications should be performed according to the procedure below and according to a frequency defined as a function of processes used (see scales ***D 30***).
Only use the ALCATEL grease contained in the lubrication syringe (refer to the maintenance component references ***F 10***).

Avoid introducing foreign matter into the pump during these operations. Lubrication must be performed with the pump switched off.

Use of the lubrication syringe

The ATP contains two bearings which must both be reloaded with grease at each relubrication period.
The syringe is equipped with two jumpers with different widths and colours (red and black) **used to proportion the grease accurately for each pump bearing.**

Lubrication of bearing on the pumping cell side:
black jumper.

Lubrication of bearing opposite the pumping cell side:
red jumper.

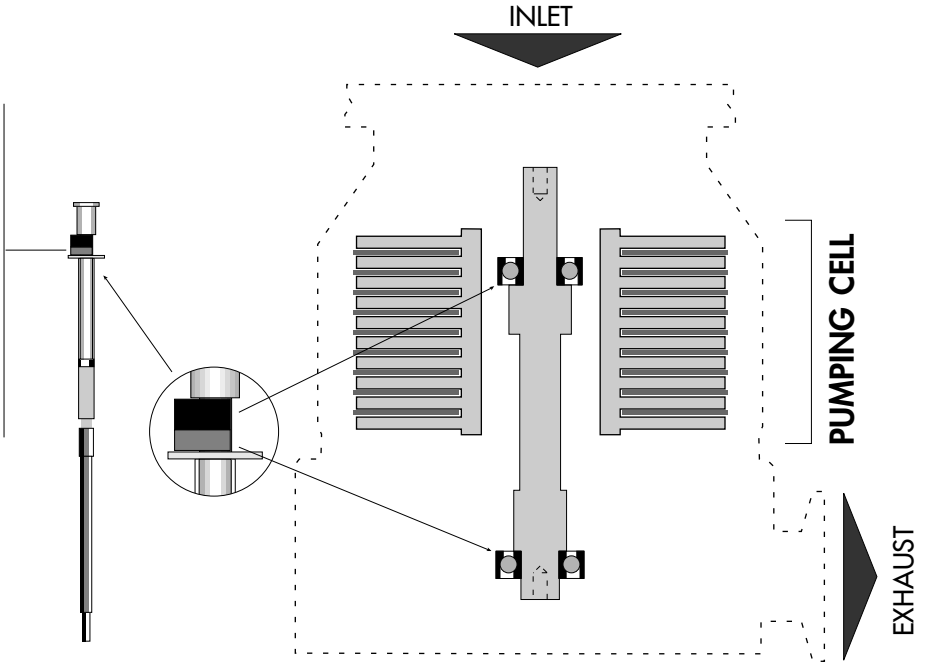

GB 00438 - Edition 01 - March 97

ATP 80 and ATP 100
Pumps lubrication

Disconnect the pump from the installation.

Bearing lubrication

3 Remove the end cap by removing the two attachment screws. Remove the compression spring and the adjustment sleeve **(asymmetrical part, mark the direction for assembly).**

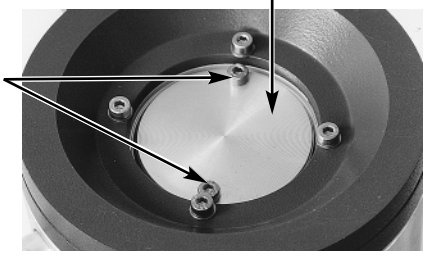

Bearing opposite the pumping cell

Introduce the syringe equipped with its needle into the bearing and remove the red jumper.

⚠ **Always position the syringe needle between two balls of the bearing so as not to damage the bearing.**

Distribute the dose of grease in 2 diametrically opposed points, until the syringe plunger comes to a stop against the black jumper.

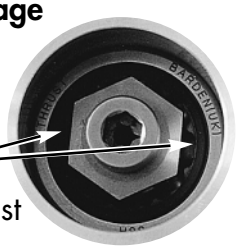

Bearing on pumping cell side

Introduce the lubrication syringe needle into the drilled screw located at the center of the rotor until it comes to a stop against the screw head. Keep the syringe pressed down to the bottom of its housing throughout the operation.

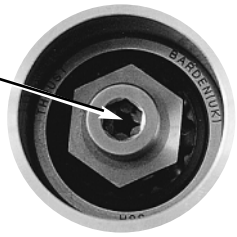

Remove the black jumper from the syringe and introduce the grease until the plunger comes to a stop.

Remove the syringe.

3 Reassemble the adjustment sleeve (taking care with the direction), the spring and the end cap with its o-ring.

The relubrication operation is complete.

Execute the pump running-in: see ***E 70.***

GB 00438 - Edition 01 - March 97

ATP 150, ATP 400 and ATP 900 Pumps lubrication

The first lubrication required for the correct operation of ATP pumps is performed in the factory. Subsequent lubrications should be performed according to the procedure below and according to a frequency defined as a function of processes used (see scales ***D 30*** and ***D 40***).
Only use the ALCATEL grease contained in the lubrication syringe (refer to the maintenance component references ***F 10***).

Avoid introducing foreign matter into the pump during these operations. Lubrication must be performed with the pump switched off.

Use of the lubrication syringe

The ATP contains two bearings which must both be reloaded with grease at each relubrication period.
The syringe is equipped with two jumpers with different widths and colours (red and black) **used to proportion the grease accurately for each pump bearing.**

Lubrication of bearing on the pumping cell side:
black jumper.

Lubrication of bearing opposite the pumping cell side:
red jumper.

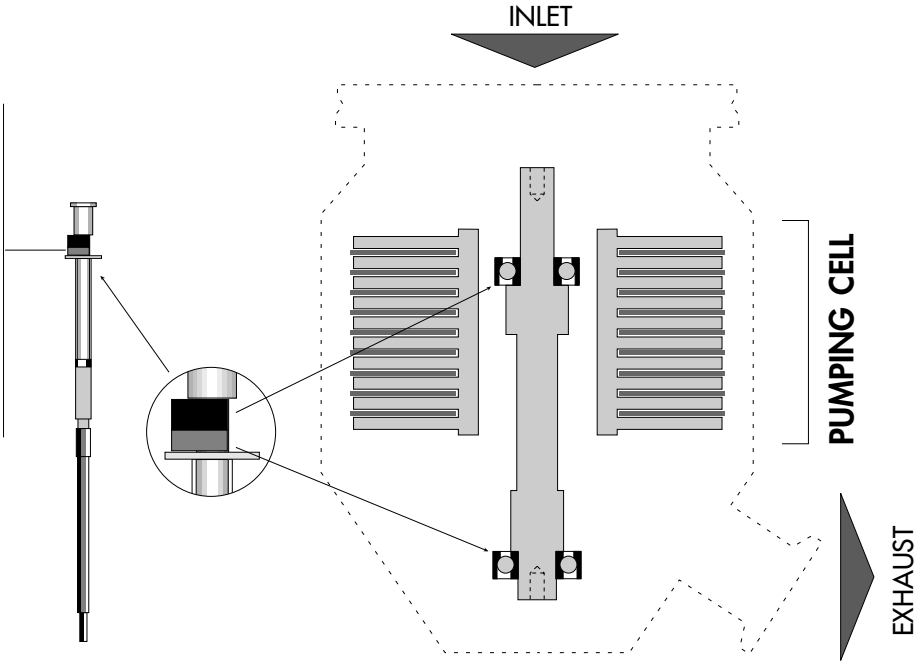

GB 00439 - Edition 01 - March 97

ATP 150, ATP 400 and ATP 900 Pumps lubrication

The pump can remain connected to the installation during lubrication.

Lubrication of the bearing opposite the pumping cell

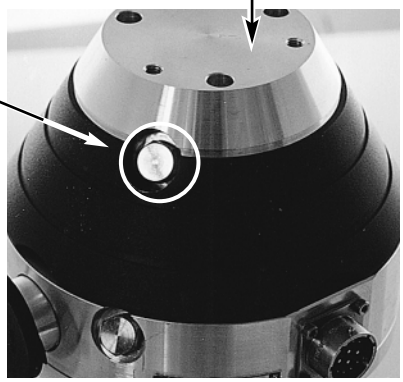

(13) Unfasten the lubricating plug on the end cap side.

Introduce the syringe equipped with its needle to the bottom of the housing and **remove the red jumper.**
While keeping the syringe needle at the bottom of its housing, introduce the grease until the plunger comes to a stop. Remove the syringe.

Replace the lubricating plug after replacing its o-ring, contained in the syringe packaging.

Lubrication of the bearing on the pump cell side

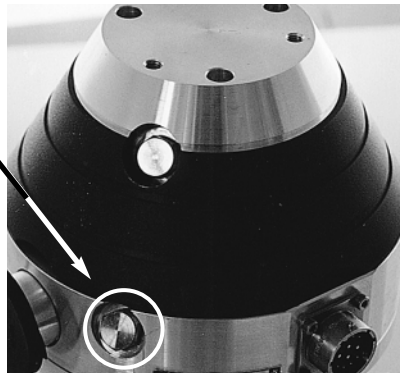

(13) Unfasten the lubricating plug on the pumping cell side.

Repeat the same operations, this time removing the black jumper from the syringe (keep the syringe at the bottom of its housing throughout the operation).

Remove the syringe and reassemble the lubricating plug equipped with its new o-ring.

The relubrication operation is complete.

Execute the pump running-in:
see ***E 70*** for ATP 150 and ATP 400, and
see ***E 90*** for ATP 900.

GB 00439 - Edition 01 - March 97

Pump running-in for ATP 80, ATP 100, ATP 150, ATP 400

The pump must undergo a running-in operation

It consists of pump operation cycles at different speeds to distribute gradually and regularly the grease through the ball bearings.

Running-in after ball bearing replacement

Running-in program No. 1 **duration ≈ 20 hours**
This operation is used to obtain the pump's initial performance in terms of reliability, noise level, vibration and power consumption.

Running-in after pump lubrication

Running-in program No. 2 **duration ≈ 2 h 30**
This operation is used to fine-tune the distribution of the grease in the bearings.

The running-in consist to run Start/Stop cycles at different speeds until a pre-defined rotational speed is reached.
A phase is made of a chain of identical cycles.

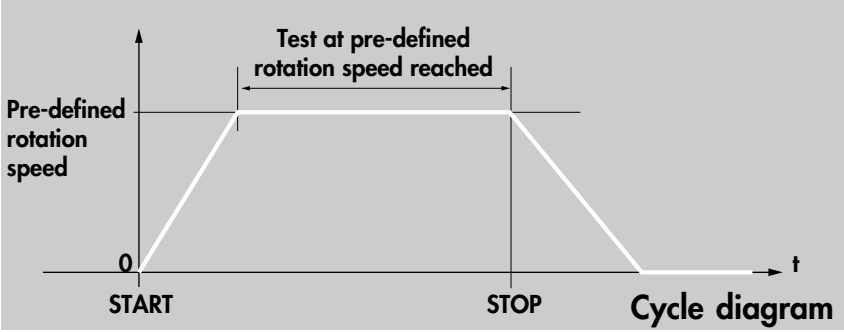

Cycle diagram

During the running-in, cycle and phase counters are decremented to display

```
PROG:1          END
PH:0        CYCLE:0
```

The running-in is ended.

GB 00443 - Edition 02 - February 99

Pump running-in for ATP 80, ATP 100, ATP 150, ATP 400

Running-in procedure

- Let the pump operate 10 minutes at atmospheric pressure.
- Then, connect the primary pump and operate at ultimate pressure (the cooling has been started up).
- Start the running-in operation as follows:

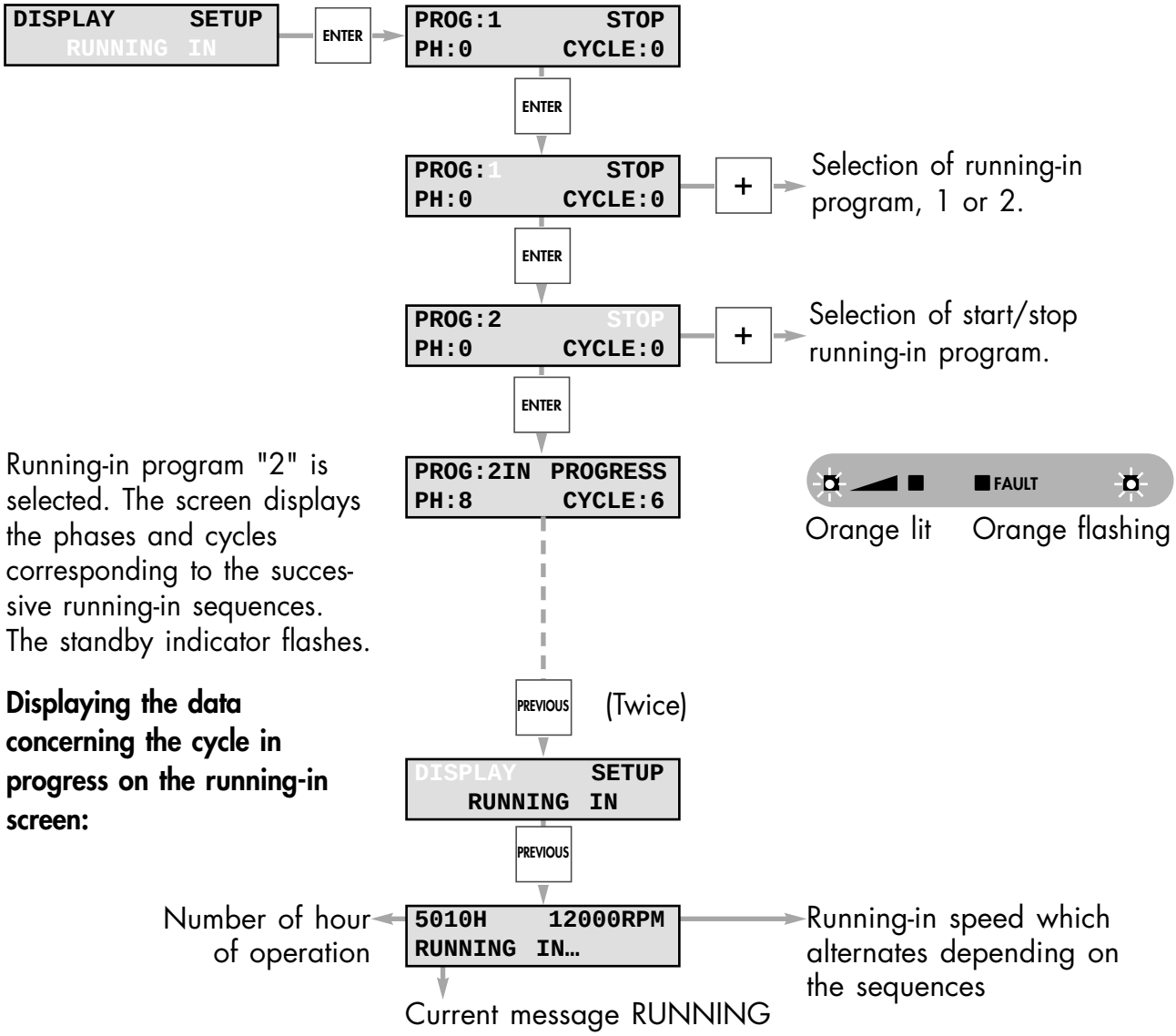

Running-in program "2" is selected. The screen displays the phases and cycles corresponding to the successive running-in sequences. The standby indicator flashes.

Displaying the data concerning the cycle in progress on the running-in screen:

GB 00443 - Edition 02 - February 99

Pump running-in for ATP 80, ATP 100, ATP 150, ATP 400

If a problem occurs during running-in

The controller displays:

```
PROG 2      FAULT
PH 1      CYCLE 2
```

and the program is stopped. Remedy to the problem and start again the running-in operation.

During the running-in cycles:
- the START / STOP / STANDBY keys are deactivated;
- access to the **SETUP** menu is impossible;
- access to the **DISPLAY** menu is possible.

We advise you against stopping the running-in procedure.

If a power failure occurs during running-in

The controller displays:

```
5600H        ORPM
READY TO START !
```

and the Standby indicator light is lit on. The running-in operation has been stopped and **it must be started again**.

GB 00443 - Edition 02 - February 99

Maintenance counters for ACT 200T and ACT 600T controllers

Principle The ball bearings can be regreased 2 times before to be changed.
The maintenance counter allows to account for these different operations (0-1-2) and to set their frequency limits (in hours).

When leaving the factory, the **«MAINTENANCE»** counter is reset at «0» and the frequency fixed at 5000h:
this can be modified depending on the defined values in the greasing schedule (***see D 30***) or on the acquired know-how.
Maintenance operations are automatically displayed by the controller since this reset.
The user will have to perform the regreasings or ball bearing replacement and to increase the maintenance counter.

Example of operation with a maintenance frequency fixed to 5000h*.

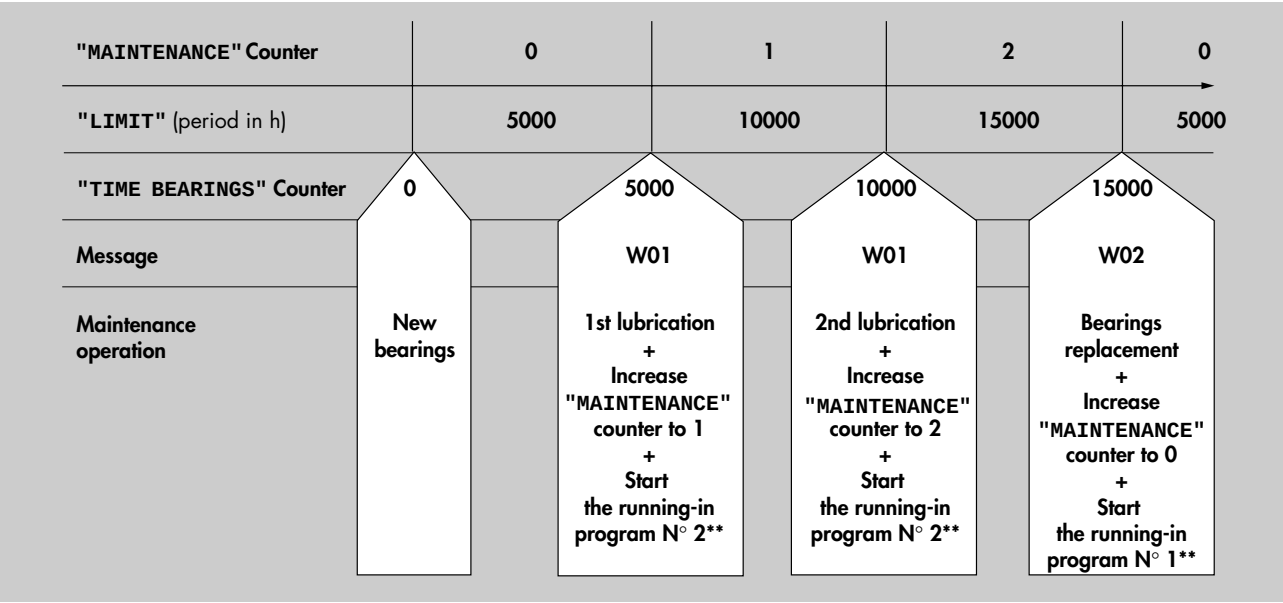

*The maintenance frequency for regreasing or ball bearing replacement could be modified along the life time of the bearings: it could be justified by a process evolution, or the user's know-how.
**In all the cases, wait for the display of running-in «END».

GB 00444 - Edition 01 - February 99

Maintenance counters for ACT 200T and ACT 600T controllers

Increasing of the «MAINTENANCE» counter after regreasing

Display of the **«W01: GREASING»** message and lighting of «**Fault**» light.

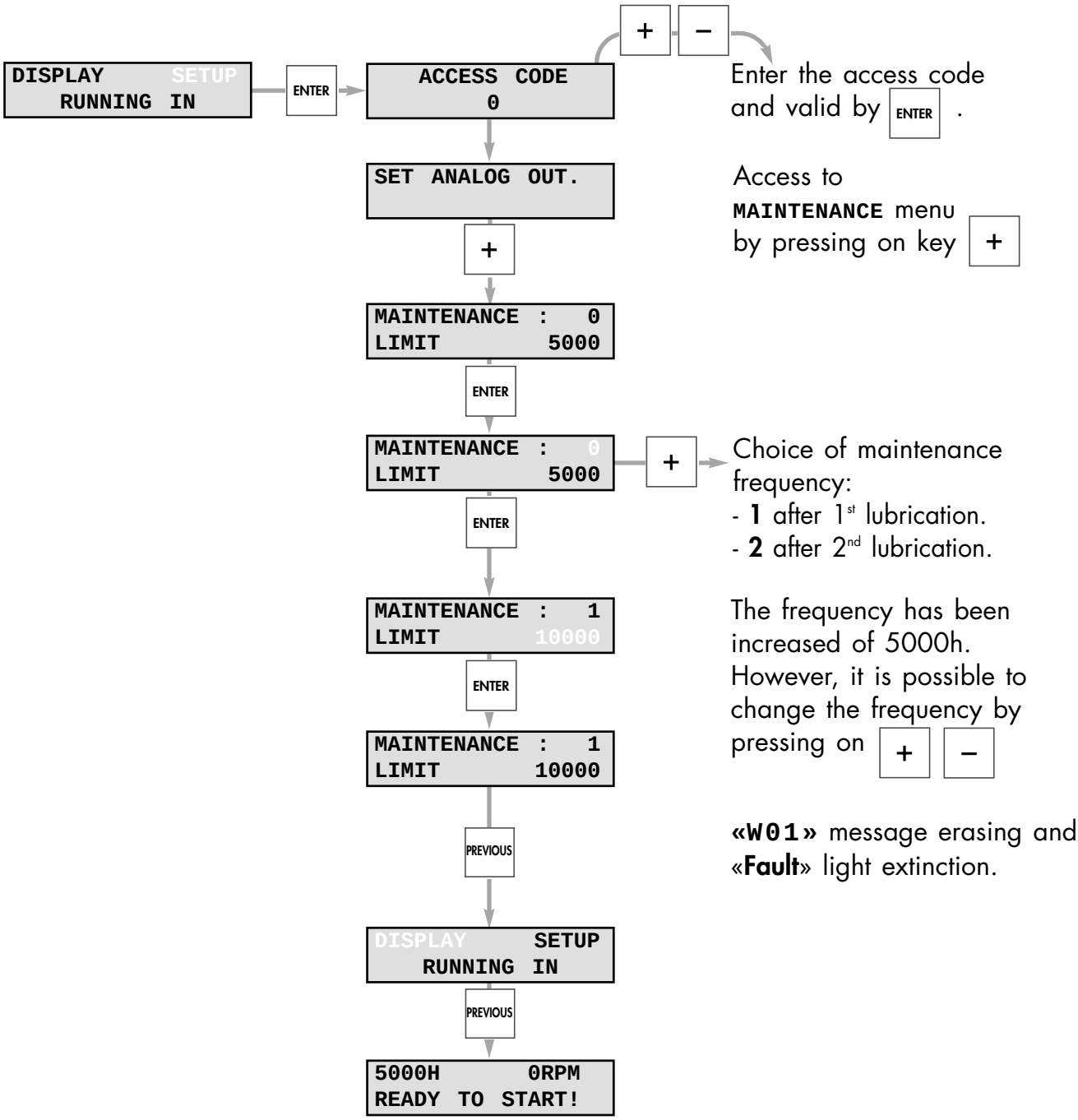

GB 00444 - Edition 01 - February 99

Maintenance counters for ACT 200T and ACT 600T controllers

Counter resetting after ball bearing replacement

Display of the **«W02 : ATP MAINTENANCE»** message and lighting of «**Fault**» light.

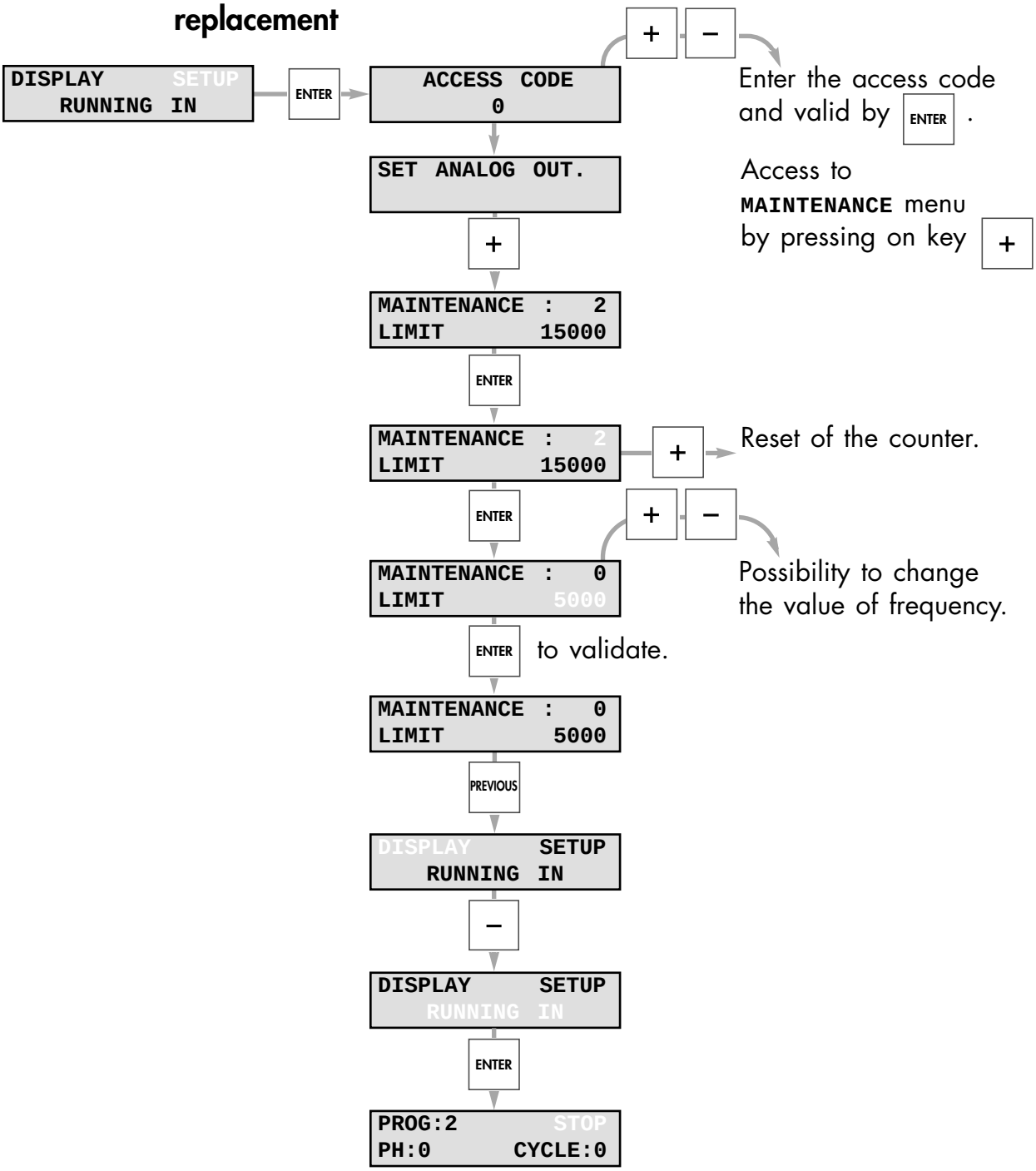

Start the running-in program N°1 and wait for the display of Running-in «END»

TIME BEARINGS counter is automatically reset to «0» after program **1 running-in**.

«W02» message erasing and «**Fault**» light extinction.

GB 00444 - Edition 01 - February 99

Maintenance counters for ACT 200T and ACT 600T controllers

After a ball bearing replacement in our Service Centers, it is necessary to reset the **TIME BEARINGS** counter as
follows:

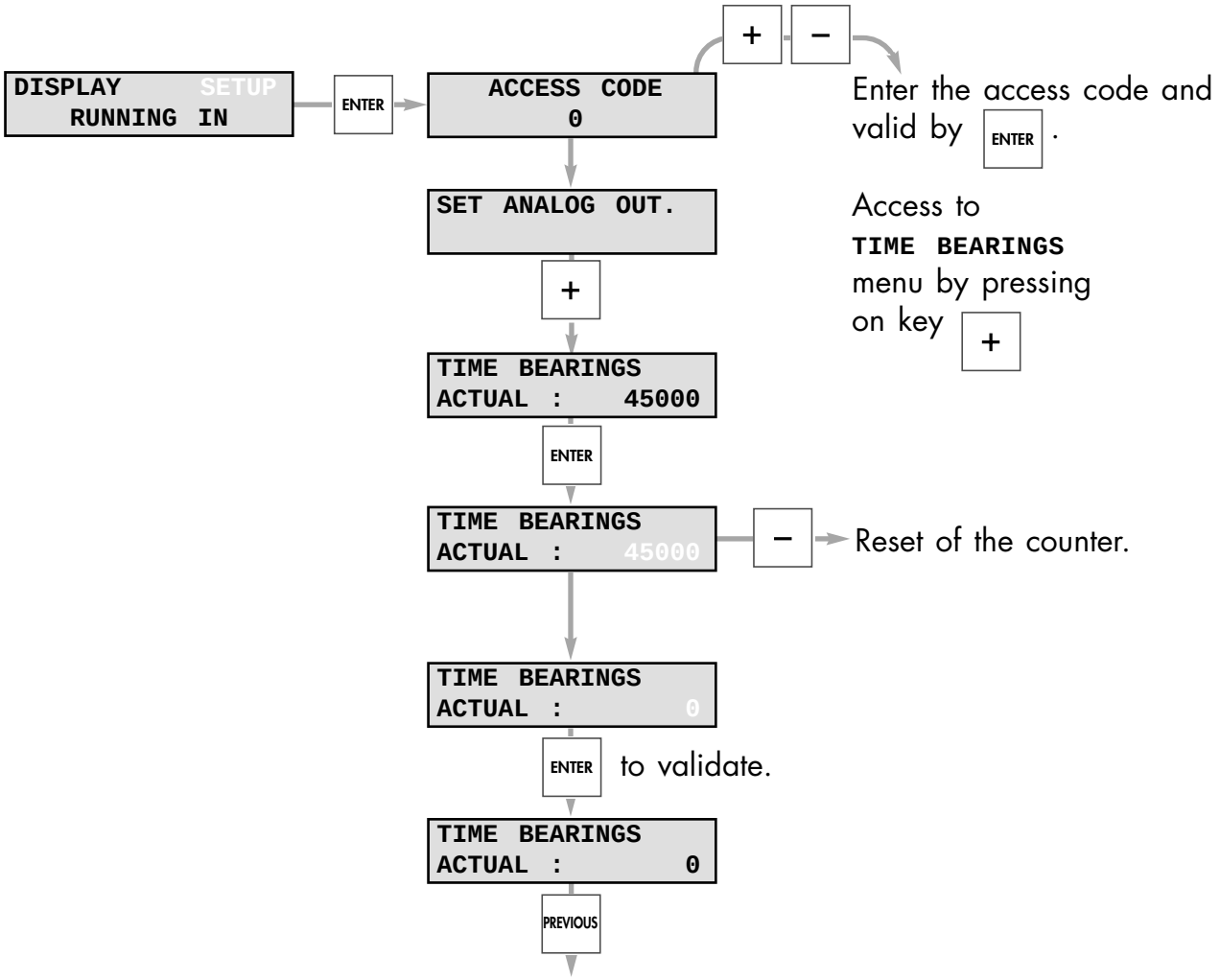

GB 00444 - Edition 01 - February 99

ATP 900 pump running-in

The pump must undergo a running-in operation

It consists of pump operation cycles at different speeds to distribute gradually and regularly the grease through the ball bearings.

Cycles and phases

The running-in consist to run Start/Stop cycles at different speeds until a pre-defined rotational speed is reached.
A phase is made of a chain of identical cycles.

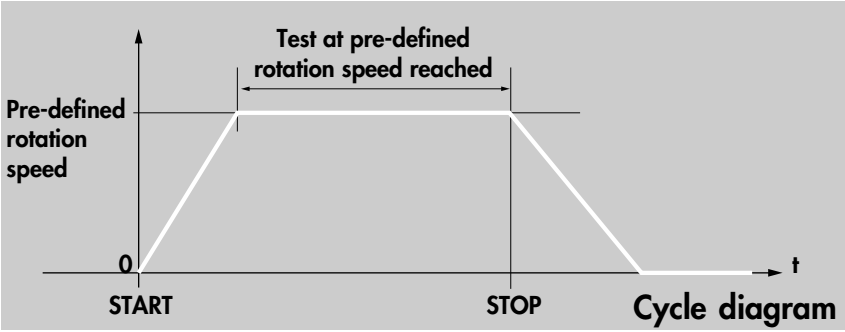

Running-in procedure

- Let the pump operate 10 minutes at atmospheric pressure.
- Then, connect the primary pump and operate at ultimate pressure (the cooling has been started up).
- Then, do the following cycles :

Running-in after lubrication of the ball bearing

1st phase :	6 cycles	START/STOP	to	6000 RPM
	and leave running for 30mn		to	6000 RPM
2nd phase :	2 cycles	START/STOP	to	10000 RPM
	and leave running for 30mn		to	10000 RPM
3rd phase :	2 cycles	START/STOP	to	16500 RPM
	and leave running for 30mn		to	16500 RPM
4th phase :	1 cycle	START/STOP	to	23000 RPM
	and leave running for 30mn		to	23000 RPM

STANDBY menu allows speed adjustment.

GB 00445 - Edition 01 - March 99

ATP 900 pump running-in

Running-in after ball bearing replacement

1st phase :	6 cycles	START/STOP	to	6000 RPM
	and leave running for 4h		to	6000 RPM
2nd phase :	2 cycles	START/STOP	to	10000 RPM
	and leave running for 4h		to	10000 RPM
3rd phase :	2 cycles	START/STOP	to	16500 RPM
	and leave running for 5h		to	16500 RPM
4th phase :	1 cycle	START/STOP	to	23000 RPM
	and leave running for 3h		to	23000 RPM
		then for1h	to	27000 RPM

GB 00445 - Edition 01 - March 99

Maintenance counters for ACT 1000T controller

Principle The ball bearings can be regreased 2 times before to be changed.
The maintenance counter allows to account for these different operations (0-1-2) and to set their frequency limits (in hours).

When leaving the factory, the **«BEARING MAINT.»** counter is reset at «0» and the frequency fixed at 5000h: this can be modified depending on the defined values in the greasing schedule (***see D 40***) or on the acquired know-how.
Maintenance operations are automatically displayed by the controller since this reset.
The user will have to perform the regreasings or ball bearing replacement and to increase the **«BEARING MAINT.»** and **«BEARING LIMIT»** counters.

Example of operation with a maintenance frequency fixed to 5000h*.

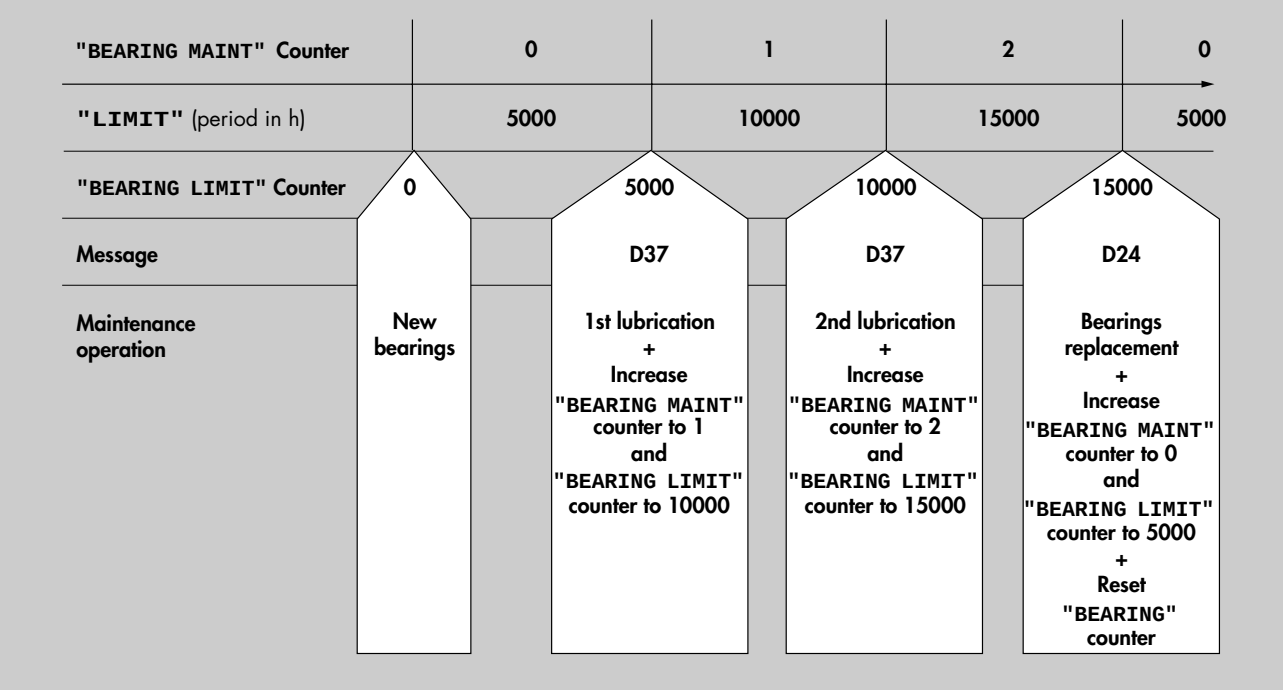

*The maintenance frequency for regreasing or ball bearing replacement could be modified along the life time of the bearings: it could be justified by a process evolution, or the user's know-how.

GB 00446 - Edition 01 - March 97

Maintenance counters for ACT 1000T controller

Increasing of the «BEARING MAINT» counter after regreasing

Display of the **«D37: GREASING BEARING»** message and lighting of «**Fault**» light.

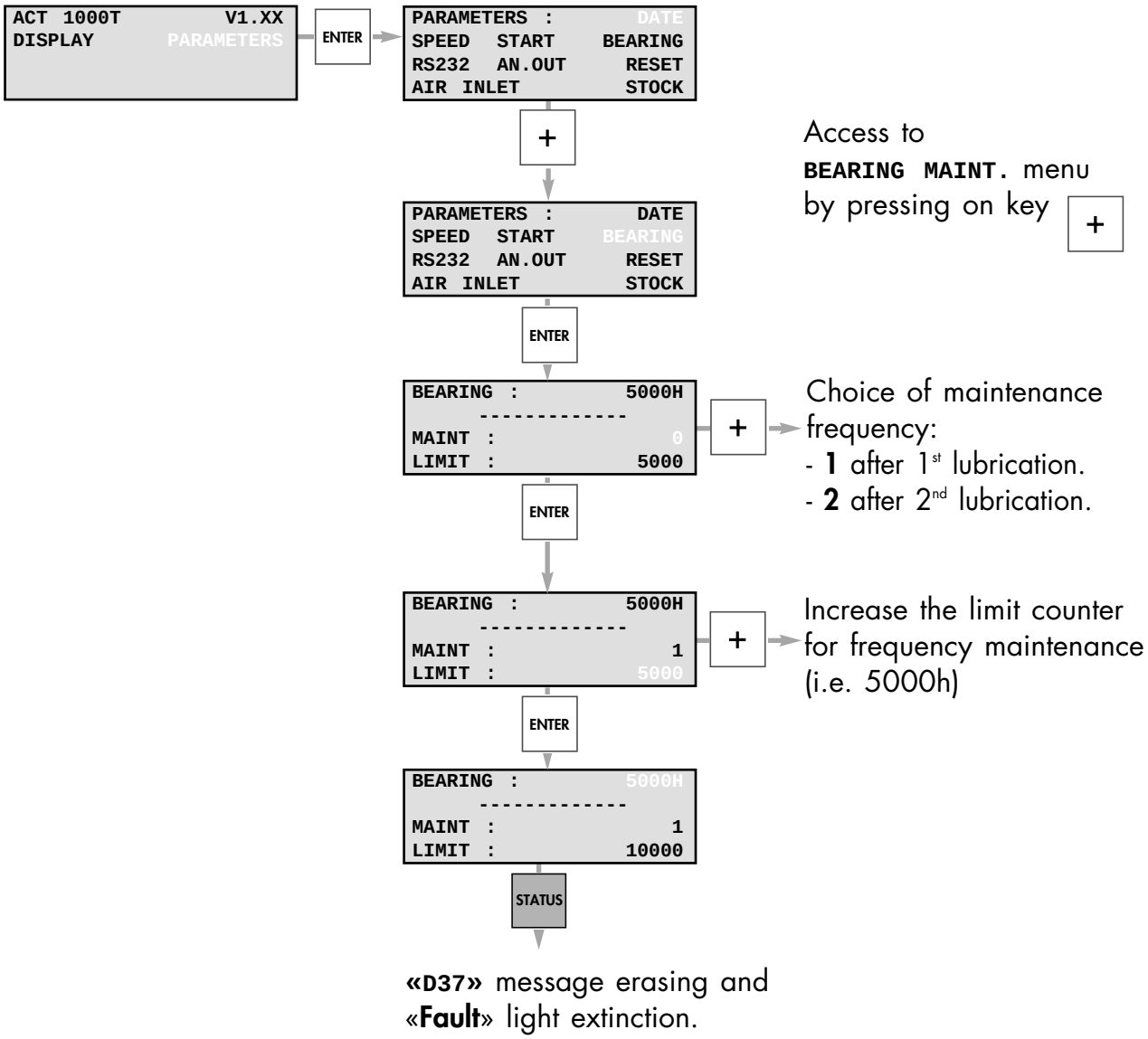

GB 00446 - Edition 01 - March 97

Maintenance counters for ACT 1000T controller

«BEARING MAINT» counter resetting after ball bearing replacement

Display of the **«D24»** message and lighting of «**Fault**» light.

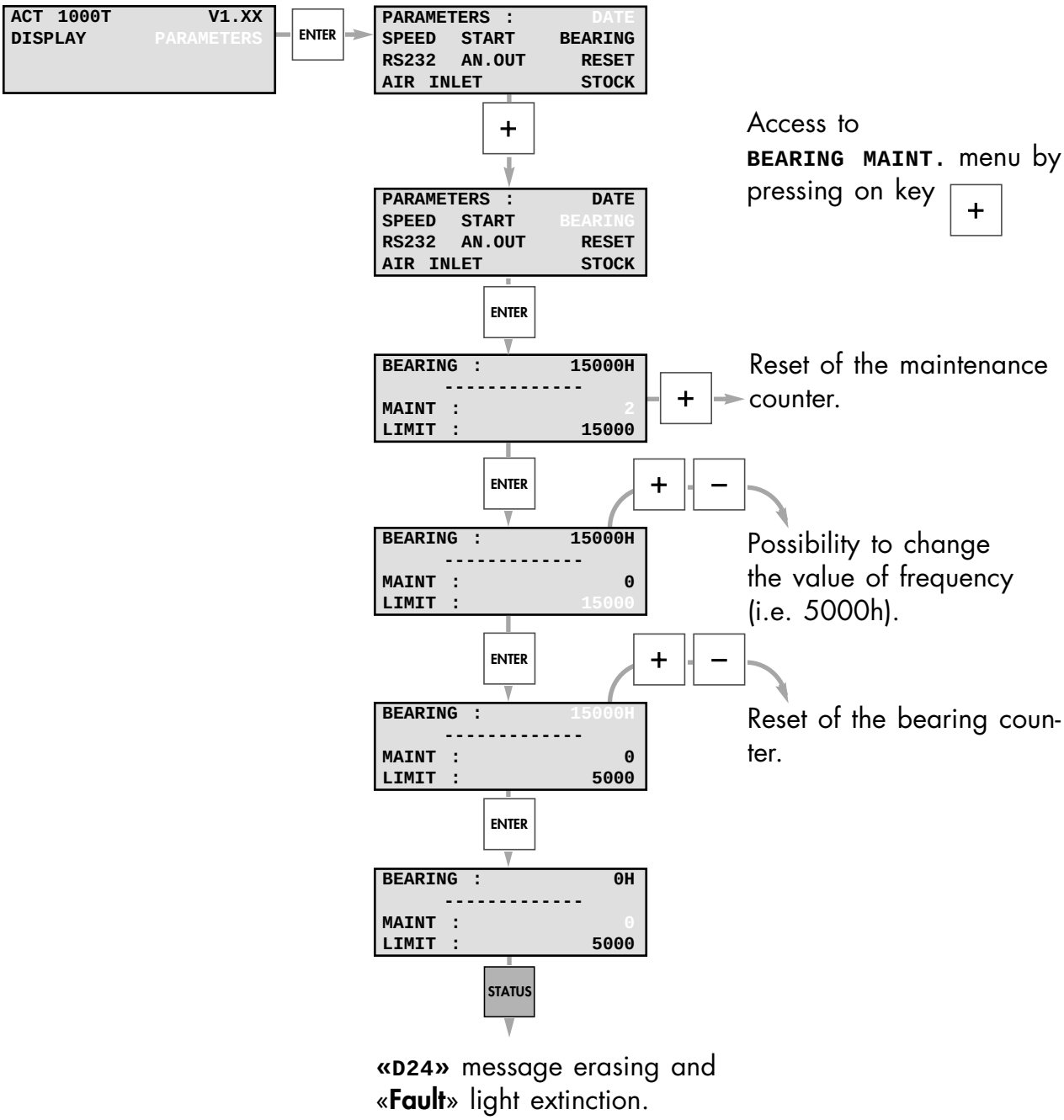

GB 00446 - Edition 01 - March 97

Chapter F

ATP User's Manual

Maintenance components

GB 00450 - Edition 08 - February 98

Maintenance parts

Lubrication syringe

Ready-to-use, it contains the grease load required for a regreasing operation on the 2 bearings and two BS rings.

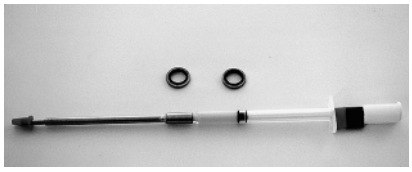

Pump type	P.N.
ATP 80/100	**056993**
ATP 150 ATP 400/900	**101924**

Necessary tools for pump overhaul (1 + 2 + 3)

1 - Seal kit

It includes all the seals which must be replaced during the maintenance of the pump with a change of bearings.

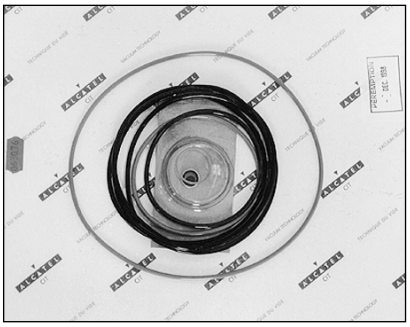

Pump type	P.N.
ATP 80/100	**062698**
ATP 150	**063078**
ATP 400	**063076**
ATP 900	**062992**

2 - Tool kit

It enables the user to replace bearings easily.
It includes the ball bearing replacement manual.

Pump type	P.N.
ATP 80/100 ATP 150 ATP 400/900	**101930**

GB 00452 - Edition 02 - March 97

Maintenance parts

3 - Ceramic bearing kit

The **kit** contains 1 bearing and a pre-load washer (not used in the ATP)

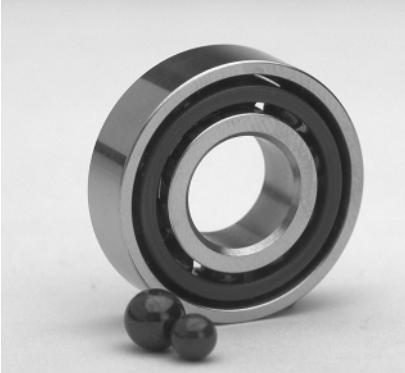

Choose the bearings according to the 2 figures marked on the identification plate, after the pump serial number and in compliance with the table below, in order to obtain a correct assembly set.

ALCATEL - ANNECY
Type : ATP 80
N° série : 85501 2 3

Shaft diam. reference

pumping cell side

side opposite the cell

Pump type	Reference on identification plate				
	1	**2**	**3**	**4**	**5**
80 100	**066671**	**066672**	**066673**	**066674**	**066675**
150 400 900	**066691**	**066692**	**066693**	**066694**	**066695**

Example of ATP 80 model pump:

First figure **2**: For the bearing on the pumping cell side, the choice of kit is reference 066672;
Second figure **3**: For the bearing on the side opposite the cell, the choice of kit is reference 066673.

GB 00452 - Edition 02 - March 97

Maintenance parts

Copper seals for pumps with CF-F flanges

Flange type	Sets of 10 parts	10 sets of 1 part (Unit packaged)
63 CF-F	**303283**	**303290**
100 CF-F	**303284**	**303291**
160 CF-F	**303285**	**303292**
200 CF-F	**303286**	**303293**

Fuses for controllers

Description	Qty	ACT 200T	ACT 600T	ACT 1000T
Fuse 5 x 20 T 250V	2	**3.15A**		
Fuse 5 x 20 T 250V	2		**6.3A**	
Fuse 6 x 32 T 250V	2			**16A**

Air inlet electrovalves

Description		Part Num.
Electrovalve coil	240V 50/60 HZ	**038124**
Electrovalve coil	220V 50/60 HZ	**038121**
Electrovalve coil	200V 50/60 HZ	**038125**
Electrovalve coil	115V 50/60 HZ	**038122**
Electrovalve coil	100V 50/60 HZ	**038126**
Electrovalve coil	12V DC	**038127**
Electrovalve operator		**038102**
Silencer		**075990**

GB 00452 - Edition 02 - March 97

Chapter G

ATP User's Manual

Appendix

GB 00465 - Edition 08 - February 98

Pumping curves

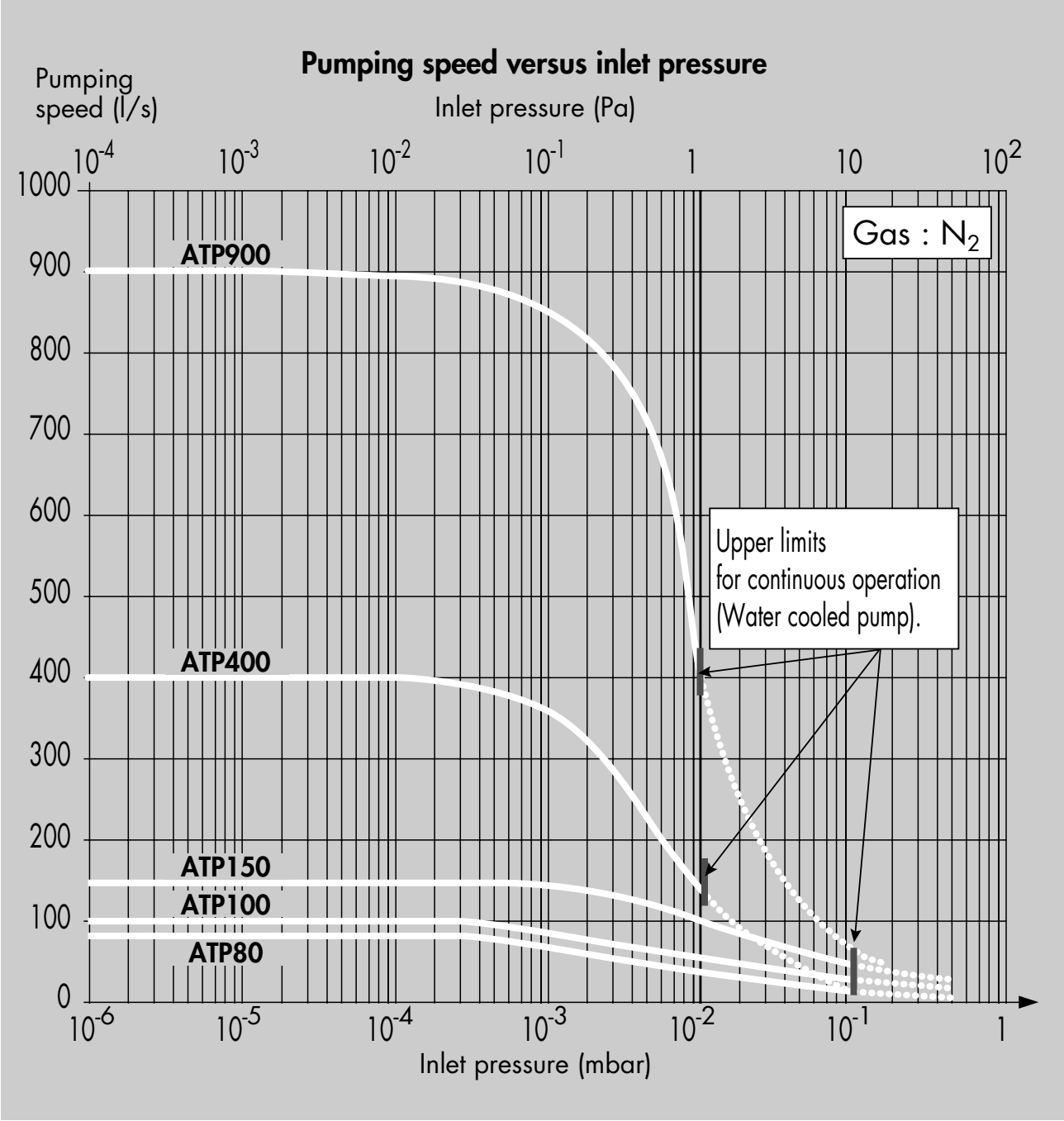

GB 00466 - Edition 01 - March 97

Pumping curves

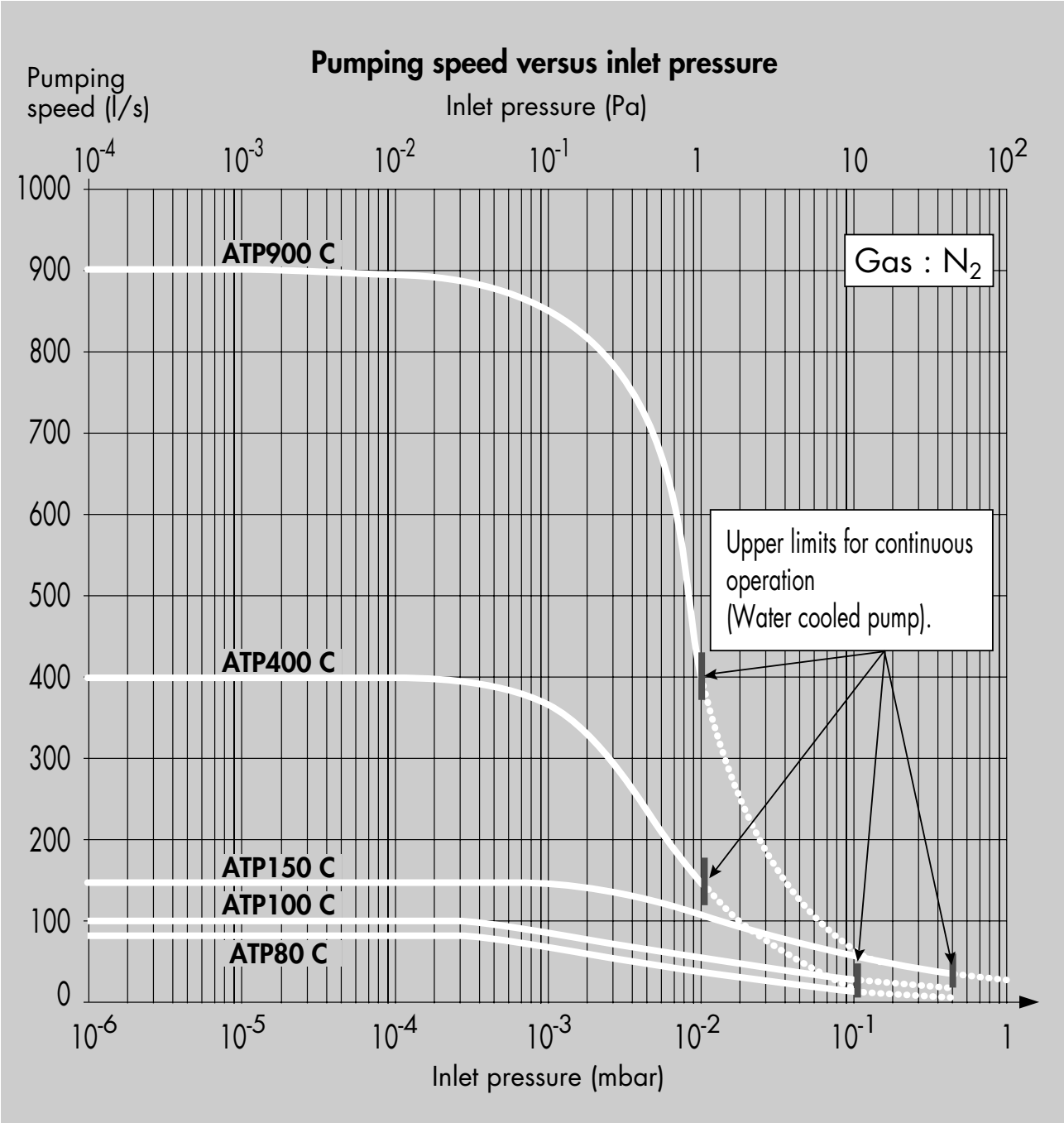

GB 00466 - Edition 01 - March 97

Pumping curves

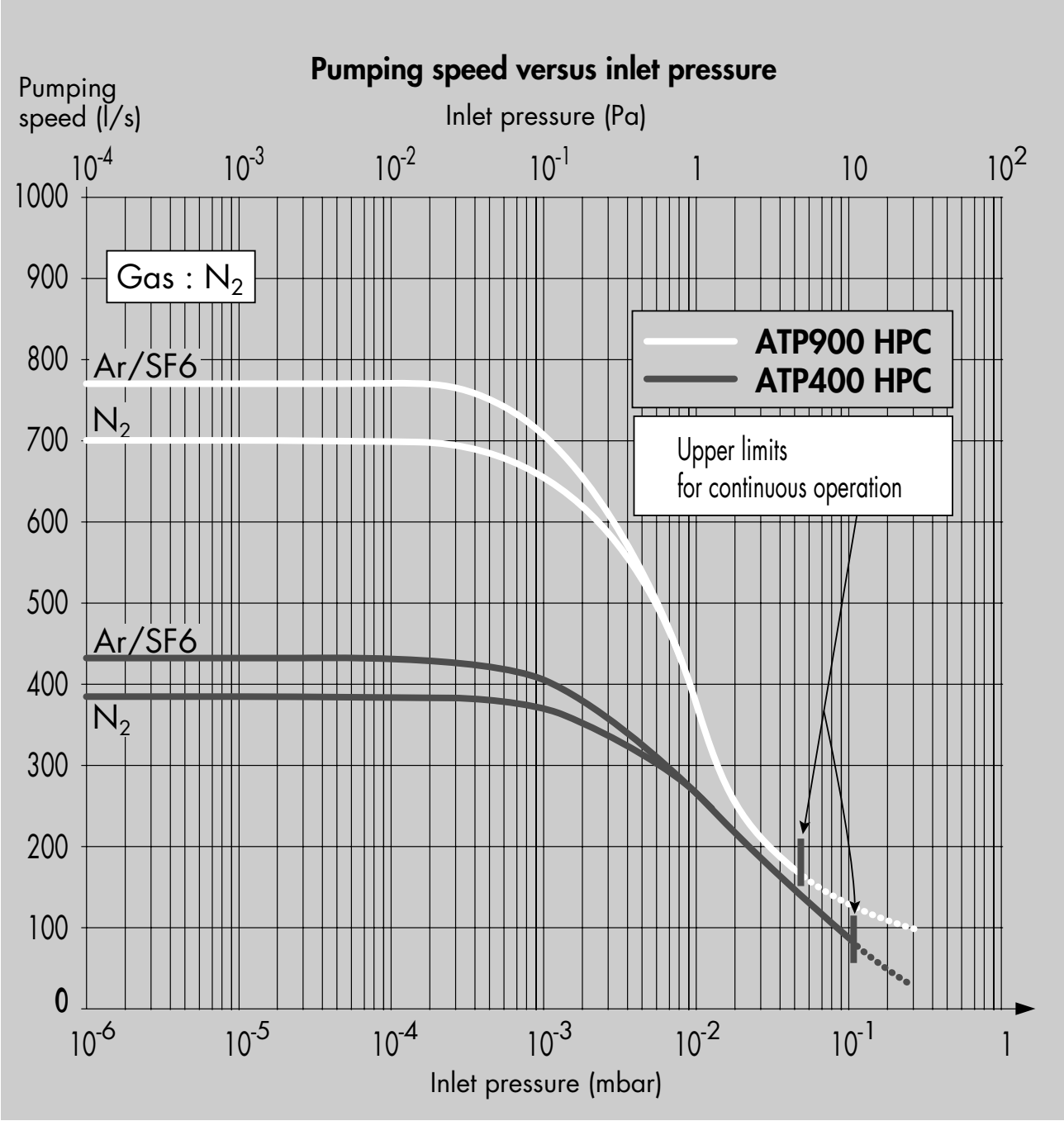

GB 00466 - Edition 01 - March 97

Pumping curves

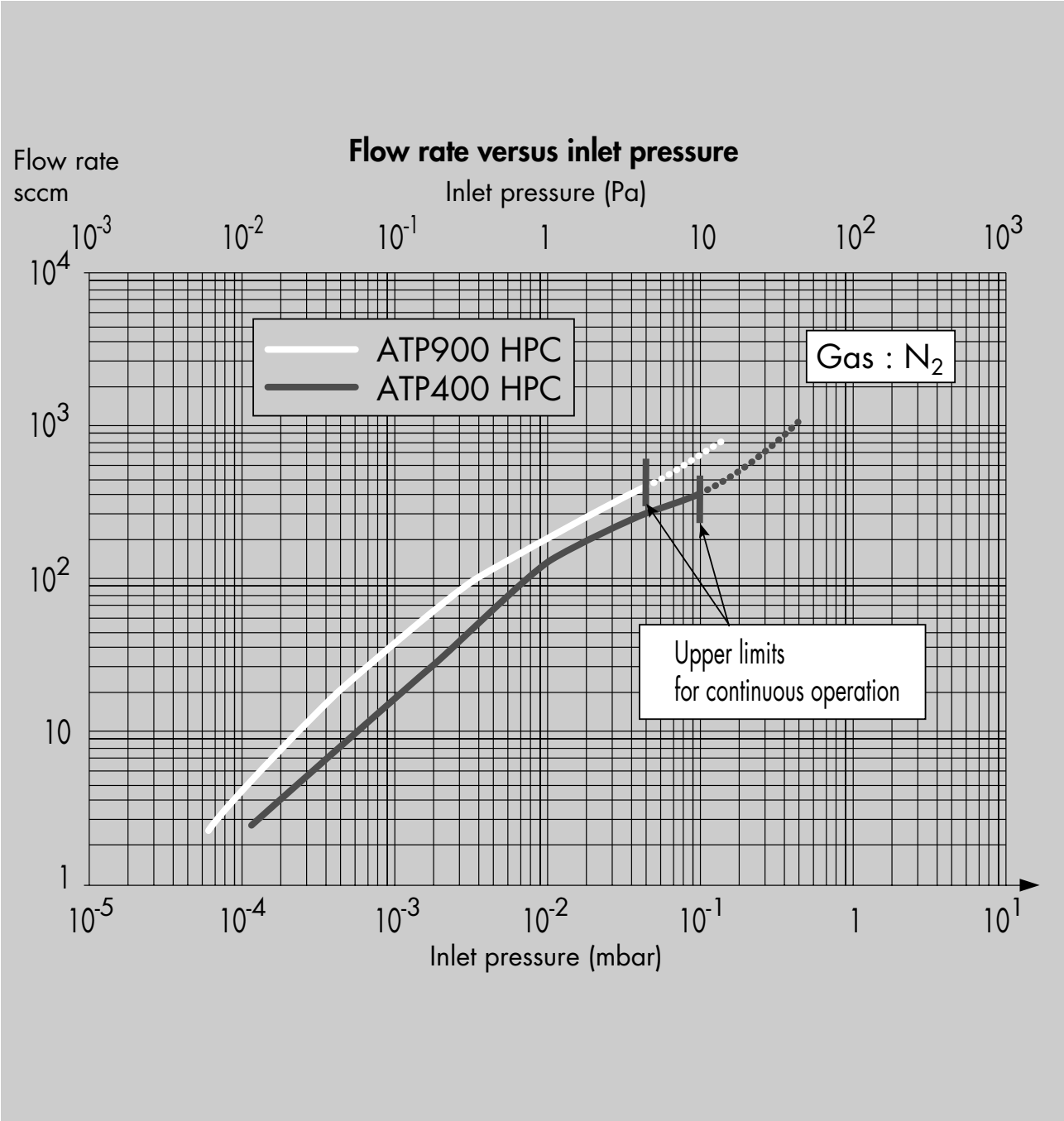

GB 00466 - Edition 01 - March 97

CHINA
Alcatel Vacuum Technology, Shanghai
N°82 Lane 887 Zuchongzhi Road
Zhangjiang High-Tech Park,
Shanghai 201203 - P.R. China
Tel. (86) 21 5027 0628
Fax. (86) 21 3895 3815

FRANCE
Alcatel Vacuum Technology France
98, avenue de Brogny - BP 2069
74009 Annecy cedex
Tel. (33) 4 50 65 77 77
Fax. (33) 4 50 65 77 89

GERMANY
Alcatel Hochvakuumtechnik GmbH
Am Kreuzeck 10 - Postfach 1151
97877 Wertheim
Tel. (49) 9342 9610 00
Fax. (49) 9342 9610 30

ITALY
Alcatel Vacuum Systems
Via Trento, 30
20059 Vimercate (Mi)
Tel. (39) 0396 86 38 55
Fax. (39) 039 66 71 25

JAPAN
Alcatel Vacuum Technology Japan
4-3-10 Shimokodanaka,
Nakahara-ku
Kawasaki, Kanagawa 211-0041
Tel. (81) 44-797-5920
Fax. (81) 44-797-5932

KOREA
Alcatel Vacuum Technology Korea
447 Banwol-dong, Hawsung-si, Kyungki-do,
445-330, Korea
Tel. (82) 031-206-6277
Fax. (82) 031-204-6279

NETHERLANDS
ALCATEL Vacuum Technology Benelux
Landzichtweg 60
NL 4105 DP Culemborg
THE NETHERLANDS
Tel. (31) 345 478 400
Fax. (31) 345 531 076

SINGAPORE
Alcatel Singapore Pte Ltd
49 Jalan Pemimpin
#01-01 APS Industrial Building
577203 Singapore
Tel. (65) 62540828
Fax. (65) 62547018

SWEDEN
Adixen Sensistor AB.
Box 76 - SE-581 02 Linköping
SWEDEN
Tel. 46 (0)13 35 59 00
Fax. 46 (0)13 35 59 01

TAIWAN
Alcatel Vacuum Taiwan
No. 169-3, Sec.1, Kang-Leh Rd
Song-Lin Village, Hsin-Feng 304
Hsin-Chu County, Taiwan -R.O.C.
Tel. (886) 35599230
Fax.(886) 35599231

UNITED KINGDOM
Alcatel Vacuum Technology UK Ltd
8 Bain Square - Kirkton Campus
Livingston - West Lothian
EH54 7DQ Scotland
Tel. (44) 1 506 418 000
Fax. (44) 1 506 418 002

USA
Alcatel Vacuum Products
67, Sharp Street
Hingham - MA 02043
Tel. (1) 781 331 4200
Fax. (1) 781 331 4230