A PASSION FOR PERFECTION

PFEIFFER VACUUM

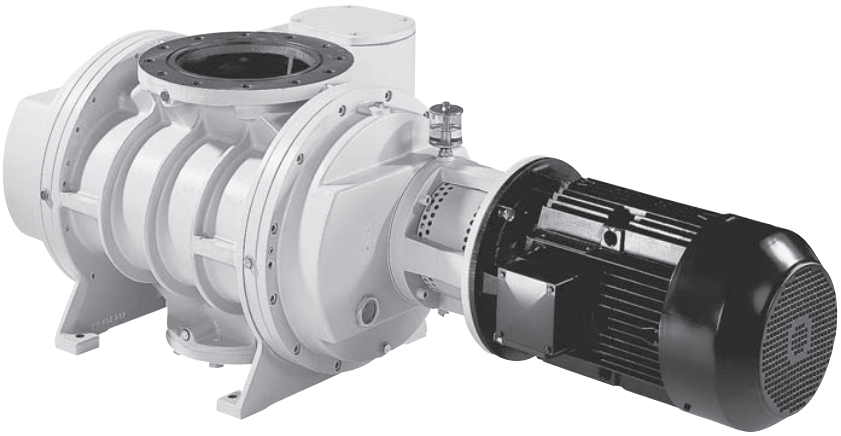

Okta 4000/6000 A/AD/AM/ADM

Roots Pump

Operating Instructions

EN

Translation of the original instructions

PP 0985 BEN/H (1208)

Table of contents

1 About this manual . . . 3
1.1 Validity . . . 3
1.2 Conventions . . . 3
2 Safety . . . 5
2.1 Safety precautions . . . 5
2.2 Protective equipment . . . 6
2.3 Proper use . . . 6
2.4 Improper use . . . 6
3 Transport and storage . . . 8
3.1 Transport . . . 8
3.2 Storage . . . 8
4 Product description . . . 9
4.1 Product identification . . . 9
4.2 Function . . . 11
5 Installation . . . 12
5.1 Setting up the pump . . . 12
5.2 Filling with lubricant . . . 12
5.3 Connecting the vacuum side . . . 14
5.4 Connecting the fore-vacuum side . . . 14
5.5 Connecting to the mains power supply . . . 15
5.6 Connecting accessories . . . 18
6 Operation . . . 21
6.1 Before switching on the pump . . . 21
6.2 Switching on the pump . . . 21
6.3 Switching off and venting . . . 22
7 Maintenance . . . 24
7.1 Precautions . . . 24
7.2 Changing the lubricant . . . 26
7.3 Cleaning the suction chamber . . . 27
7.4 Cleaning the overflow valve . . . 28
7.5 Assembling the motor and coupling . . . 29
8 Decommissioning . . . 31
8.1 Shutting down for longer periods . . . 31
8.2 Re-starting . . . 31
8.3 Disposal . . . 31
9 Malfunctions . . . 32
9.1 Rectifying malfunctions . . . 32
10 Service . . . 34
11 Spare parts . . . 35
11.1 Spare parts packages . . . 35
12 Accessories . . . 36
12.1 Documentation for accessories . . . 36
13 Technical data . . . 37
13.1 Dimensions . . . 39
Declaration of conformity . . . 41

1 About this manual

1.1 Validity

This operating manual is for customers of Pfeiffer Vacuum. It describes the functioning of the designated product and provides the most important information for safe use of the unit. The description follows applicable EU guidelines. All information provided in this operating manual refer to the current state of the product's development. The documentation remains valid as long as the customer does not make any changes to the product.

Up-to-date operating instructions can also be downloaded from www.pfeiffer-vacuum.com.

Applicable documents

Okta 4000/6000 A/AD/AM/ADM	Operating instructions
Declaration of conformity	Part of this document
Operating instructions for accessories (order-specifically)	see section "accessories"*
For version with magnetic coupling	PW 0142 BN*
For version with crown gear coupling, assembly instructions of the coupling manufacturer	

*also available via www.pfeiffer-vacuum.com

1.2 Conventions

Safety instructions

The safety instructions in Pfeiffer Vacuum operating instructions are the result of risk evaluations and hazard analyses and are oriented on international certification standards as specified by UL, CSA, ANSI Z-535, SEMI S1, ISO 3864 and DIN 4844. In this document, the following hazard levels and information are considered:

DANGER

Imminent danger

Indicates an imminent hazardous situation that will result in death or serious injury.

WARNING

Possibly imminent danger

Indicates an imminent hazardous situation that can result in death or serious injury.

CAUTION

Possibly imminent danger

Indicates an imminent hazardous situation that can result in minor or moderate injury.

NOTICE

Command or note

Command to perform an action or information about properties, the disregarding of which may result in damage to the product.

Pictograph definitions

Prohibition of an action or activity in connection with a source of danger, the disregarding of which may result in serious accidents

Warning of a displayed source of danger in connection with operation of the unit or equipment

Command to perform an action or task associated with a source of danger, the disregarding of which may result in serious accidents

Important information about the product or this document

Instructions in the text

➔ Work instruction: here you have to do something.

Symbols used

The following symbols are used consistently throughout in all illustrations:

- Ⓥ Vacuum flange
- ⓥⓥ Exhaust flange (fore-vacuum flange)
- ⚡ Electrical connection
- Ⓜ Measuring connection for pressure or gas temperature
- SG Sealing gas connection

2 Safety

2.1 Safety precautions

Duty to inform

Each person involved in the installation, operation or maintenance of the vacuum pump must read and observe the safety-related parts of these operating instructions.

➔ The operator is obligated to make operating personnel aware of dangers originating from the vacuum pump, the pumped medium and the entire system.

Installation and operation of accessories

Pfeiffer Vacuum pumps can be equipped with a series of adapted accessories. The installation, operation and maintenance of connected devices are described in detail in the operating instructions of the individual components.

➔ For information on order numbers of components, see "Accessories".

➔ Use original accessory parts only.

- Do not expose any body parts to the vacuum.
- Observe the safety and accident prevention regulations.
- Check regularly that all safety precautions are being complied with.
- Do not carry out any unauthorised modifications or conversions to the pumps.
- Depending on the operating and ambient conditions, the surface temperature of the pumps may rise above 100 °C. Use suitable finger guards if necessary.
- When returning the pumps to us please note the instructions in the Service section.

The following safety instructions are only valid for the disassembly of the drive system for a vacuum pump with a magnetic coupling:

- When disassembling the drive system from the pump housing, the strong magnetic field may influence the function and operational reliability of electrical and electronic devices.
- Persons with cardiac pacemakers must keep away from the magnetic coupling. **Danger to life**!
  - **Minimum distance: 2 m!**
- Disassembled magnetic couplings must be kept away from computers, data storage media and other electronic components.
- Keep the disassembled components of the magnetic coupling separate at all times. Danger of crushing!
- Do not allow any magnetised parts into the vicinity of the magnetic coupling. Danger of injury!

2.2 Protective equipment

Determined situations concerning the handling of vacuum pumps require wearing of personal protective equipment. The owner, respectively the employer are obligated to provide adequate equipment to any operating persons.

DANGER

Danger to health by hazardous substances during maintenance or installation

Depending on the process vacuum pumps, components or operating fluids can be contaminated by toxic, reactive or radioactive substances.

➔ Wear adequate protective equipment during maintenance and repairs or in case of reinstallation.

CAUTION

Risk of injury through hot surfaces

Vacuum pumps can become hot during operation.

➔ Allow the pump to cool before maintenance and repairs.

➔ If necessary wear protective gloves according to directive EN 420.

WARNING

Increased noise emission!

Increased noise emission can occur within a limited area surrounding the vacuum pump.

➔ Provide noise protection or

➔ wear hearing protection.

2.3 Proper use

NOTICE

CE conformity

The manufacturer's declaration of conformity becomes invalid if the operator modifies the original product or installs additional components.

➔ Following installation into a plant and before commissioning, the operator must check the entire system for compliance with the valid EU directives and reassess it accordingly.

- The vacuum pump may only be used to generate a vacuum.
- Use sealing gas, depending on the process.
- Installation, operating and maintenance regulations must be complied with.
- Other accessories, than those described in this manual, must not be used without the agreement of Pfeiffer Vacuum.

2.4 Improper use

Improper use will cause all claims for liability and warranties to be forfeited. Improper use is defined as usage for purposes deviating from those mentioned above, especially:

- pumping of corrosive gases
- pumping of explosive media
- operation in potentially explosive areas
- operation of the pump with open vacuum or fore-vacuum flange open to the atmosphere
- use of the vacuum pump to generate pressure

- connection to pumps or units which are not suitable for this purpose according to their operating instructions
- connection to units which have exposed voltage-carrying parts
- the evacuation of gases that may form adherent deposits or condensate in the suction chamber

3 Transport and storage

3.1 Transport

WARNING

Danger from falling and swinging loads!

When lifting the pump there is a danger of falling parts.

➔ Make sure that there are no persons under the suspended load.

➔ Close off and supervise the area under the pump.

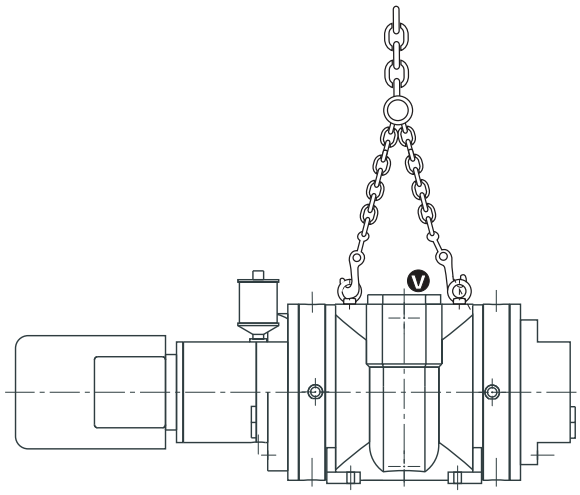

Fig. 1: Lifting and transporting the pump

➔ Remove the locking cap from the vacuum and fore-vacuum flange immediately before connecting!

➔ Lift the pump using lifting devices, and use only the ring bolts (threaded holes in the vacuum flange) provided for that purpose on the top side of the pump.

3.2 Storage

The pumps of standard design are not provided with a corrosion protection. Therefore a special corrosion protection should be provided by the customer and agreed with the manufacturer for longer storage. Otherwise should be proceeded as follows.

➔ Check that all the openings on the pump are securely closed.

➔ Store the pump only indoors, preferably at temperatures between -10 °C and +40 °C.

- In rooms with moist or aggressive atmospheres, the pump must be airproof shrink-wrapped in a plastic bag together with a bag of desiccant.
- After storage periods longer than two years, it is recommended to carry out maintenance and change the lubricant before using the pump.

4 Product description

4.1 Product identification

To ensure reliable identification of the product, always keep all of the information on the rating plate to hand, and use it when communicating with Pfeiffer Vacuum:

- Pump model and model number
- Serial number
- Type and quantity of the lubricant
- Max. allowable pump speed

For motor-specific data, please see the separately installed motor rating plate.

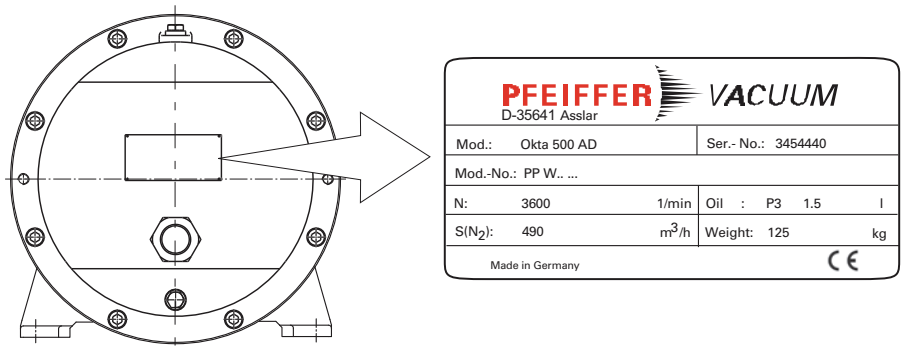

Fig. 2: Product identification on the rating plate (for example)

Shipment

- Pump with motor/without motor
  - For pumps without motor: coupling half of motorside
- Lubricant P3 (for standard pump)
- Seals for the connection flanges,
  - Centering ring (for A/AM-series pumps)
  - O-ring (for AD/ADM-series pumps)
- Set of screws for the connection flanges
- Protective cover for the connection flanges
- 2 ring bolts for lifting the pump
- Operating manual

Differences between the pump types

Pump type	Pump designs
Standard version (A series, AM series)	Pump in standard version: ● Standard motor ● Connection flanges are designed as ISO flanges ● Overflow valve for protection against thermal overload ● Connections for sealing gas inlet and gear chamber extraction ● Version with magnetic coupling (only AM series)
Pressure surge protected version (AD series, ADM series)	Pump in pressure surge protected version; changes relative to the standard version: ● Parts subjected to pressure are made of spheroidal graphite iron EN-JS 1025; EN-GJS-400-18-LT (GGG 40.3) ● The pump is subjected to a special pressure test (16 bar) ● Connection flanges are designed as DIN flanges (PN 16) ● Version with magnetic coupling (only ADM series)
Special versions	● Various pressure differentials at the overflow valve ● Special seal materials that are resistant to aggressive media ● Coated pump insides to achieve corrosion protection and/or good anti-sticking properties

4.2 Function

The operating principle of the Roots pumps is based on two synchronous pistons which rotate in a housing without touching. The pumping effects arise as a result of the opposing rotation of the two figure-of-eight shaped rolling pistons. While suction chambers are formed between the rolling pistons and the housing, the rolling pistons continuously form a mutual seal without touching each other or the housing. This opposing yet synchronised movement of the rolling pistons is achieved by means of a pair of gears mounted on the extended shaft ends. Lubrication is limited to the two bearing and gear chambers which are arranged separately from the suction chambers. As the Roots pump is not capable of compressing against atmospheric pressure it needs to be operated in conjunction with an upstream backing pump.

A bypass valve that is either cast into or bolted to the housing protects the pump against overheating.

The version with magnetic coupling has as an alternative to conventional shaft feedthrough a static seal towards the outside.

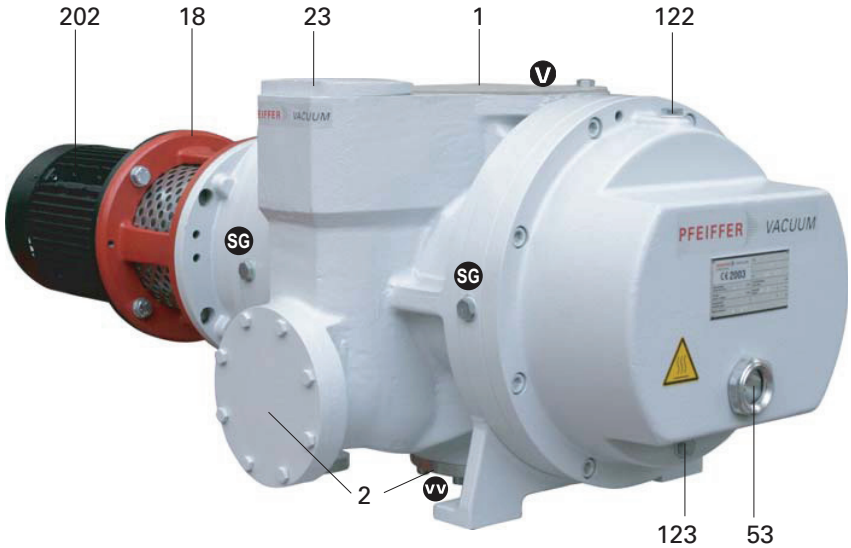

1	Vacuum flange	18	Lantern	122	Lubricant filling screw (2x)
2	Fore-vacuum flange (blank flange)	23	Overflow valve cover	123	Lubricant drain screw (2x)
		53	Sightglass		

Fig. 3: Roots pump Okta 4000 AM/ADM

5 Installation

5.1 Setting up the pump

When installing the pump, observe the following conditions:

➔ Always place the pump on a firm, even surface.
- Check the load-bearing capacity of the floor at the installation location.
- The vacuum flange serves as the reference surface.
- A drilled hole is provided on each foot for attachment to the mounting surface. Do not distort the pump when screwing on.

➔ When installing the pump in a closed housing, ensure there is sufficient air circulation.
- Both sight glasses must be visible and accessible for inspection and maintenance purposes.
- Voltage and frequency information given on the motor rating plate must be visible.

➔ Where stationary installation is involved, anchor the pump on site.

➔ Fill up with lubricant before operating the first time *(see p. 12, chap. 5.2)*.
- Amount and type according to rating plate

Installation conditions

The vacuum pump must be installed and operated under the following ambient conditions:

Installation location	Inside; must however be protected against dust deposits Outside; must however be protected against direct weather influences
Permissible ambient temperature range	+5 °C ... +40 °C
Relative humidity	Max. 85 %
Installation altitude	Max. 2000 m above m.s.l., the rated power of the motor is reduced by approx. 10 % for installation altitudes > 1000 m and an ambient temperature of 40°C
Power connections	according to voltage and frequency information given on the motor rating plate

5.2 Filling with lubricant

The type and amount of lubricant is visible on the pump's rating plate for each

vacuum pump. Generally only the lubricant used during initial assembly can be used later on.

The delivery for the **standard pump** contains one filling of lubricant (separate package). For special applications (e.g. for pumping corrosive gases), other lubricants can be used also. These must be defined in accordance with Pfeiffer Vacuum specifications before initial assembly and ordered separately.

Permissible lubricants

- P3 (standard lubricant)
- F5 (Lubricant for corrosive gas versions)
- D1 for special applications (e.g. for oxygen applications)
- Other lubricants on request.

NOTICE

Use approved operating fluids only!

The use of operating fluids that have not been approved by Pfeiffer Vacuum shall result in a limited warranty. In such cases, it is not possible to guarantee that product-specific performance data will be achieved.

➔ Prior consultation is required before using other application-specific operating fluids.

Filling with lubricant

➔ Unscrew lubricant filler screws 122.

➔ Fill gear chamber and bearing chamber (on the drive side) with lubricant.

– Fill level on initial fill: approx. 5 mm below the middle of the sight glass.

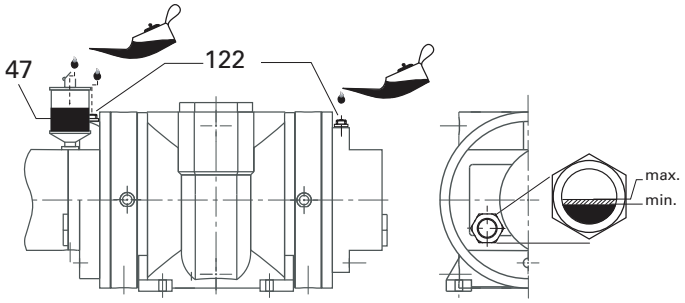

Fig. 4: Filling with lubricant

➔ Screw in lubricant filler screws 122.

➔ Check lubricant level when the pump is running at operating temperature in final vacuum:

– Fill level during operation: as per the sight glass image.

– Check fill level during continuous operation on a daily basis, otherwise each time the pump is switched on. To add lubricant, switch off the pump and vent it to atmospheric pressure.

WARNING

Toxic vapours!

Danger of poisoning when igniting and heating synthetic operating fluids (e.g. F4/F5) above 300°C.

➔ Observe the application instructions.

➔ Do not allow operating fluid to make contact with tobacco products; observe safety precautions when handling chemicals.

Filling the sealing oil chamber (versions with RSSR only)

The shaft feedthrough of the drive shaft is sealed with sealing oil-covered radial shaft seals, and is fed by an oiler 47. The type of sealing oil is the same as the lubricant.

➔ Fill up oiler to halfway with lubricant.

– Oiler 47 should always be filled to a max. of halfway (when the pump is cold); top up as required.

The lubricant expands when the pump heats up, which could cause lubricant to leak if the oiler is overfilled.

5.3 Connecting the vacuum side

WARNING

Exposed, rotating rolling pistons!

Fingers and hands can become crushed when the intake flange is open.

➔ Keep all body parts out of operating range of the rolling pistons.

➔ Use a wooden handle to rotate the rolling pistons during cleaning.

➔ The connection between the pump and the vacuum chamber should be kept as short as possible and should have at least the nominal diameter of the pump flange. Use a greater nominal diameter on line lengths > 5 m.

➔ Piping to the pump must be suspended or supported.

– Physical forces from the piping system must not be allowed to act on vacuum pumps.

➔ Clear welded lines of any welding scales, loose parts etc. before installation.

NOTICE

Danger of intake of solid particles!

Even in clean processes, fouling from the system must be anticipated during initial commissioning.

➔ Use a suitable start-up strainer at the intake connection (see accessories).

➔ Ensure that this strainer is only removed when the risk of solid particles entering the pump can be excluded.

➔ Note loss of pumping speed if necessary.

5.4 Connecting the fore-vacuum side

➔ Choose the cross-section of the exhaust line to be at least the size of the nominal connection diameter of the Roots pump's exhaust flange.

➔ Lay the pipes in such a way that the Roots or backing pump will not be subjected to any mechanical tension.

– Suspension components should be integrated into the piping.

– Ensure that mating flanges are in a parallel position.

➔ Lay piping from the pump sloping downward so that no condensate can flow back into the pump; otherwise fit a condensate separator.

– If an air trap is created in the system, then a device for draining condensation water must be provided at the lowest point.

WARNING

Emission of toxic substances from the exhaust!

Danger of poisoning from emitted gases or vapours, which can be detrimental to health and/or can pollute the environment, depending on the particular application.

➔ Comply with the applicable regulations when working with toxic substances.

➔ Only officially approved filter systems may be used to separate and remove these substances.

5.5 Connecting to the mains power supply

The pumps are supplied with three phase motors for different voltages and frequencies. The applicable motor type is shown on its rating plate.

DANGER

Voltage-bearing elements

Danger to life from electric shock.

➔ The electrical connection can be carried out only by trained and authorised electricians.

➔ Disconnect the power supply and secure it against being switched back on.

➔ Ensure the system is adequately earthed.

NOTICE

Excess voltage!

Danger of destroying the motor.

➔ Power connections must comply with local regulations. Voltage and frequency information given on the motor rating plate must correspond to the mains voltage and frequency values.

➔ To protect the motor and supply cable in case of malfunction, mains fuse protection must be implemented.

NOTICE

Thermal motor overload!

When operating with a frequency converter, observe the permitted frequency range of the motor.

➔ The standard motor is suitable for operation within the frequency range of 20 to max. 60 Hz.

The three-phase current motor circuit

The direction of rotation must be checked on pumps with three-phase motors!

The connections U1 - L2, V1 - L1 and W1 - L3 result in a clockwise rotation of the motor shaft as seen looking towards the motor fan.

Delta Connection

The three coils are connected in series with the connection point connected to the mains. The voltage of each coil is the same as the mains voltage whereas the mains current is the cube root of the coil current. Delta connections are denoted by the symbol **Δ**. The voltage between the mains supply lines is called mains voltage. The mains current is the current which flows in the supply lines.

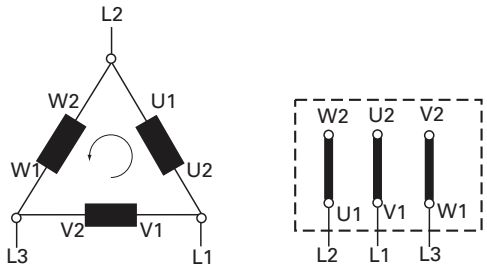

Fig. 5: Motor coil and connecting plate of Delta Connection (for low voltage)

Star Connection

The ends of the three coils are connected at the star center. The terminal voltage is the cube root of the coil voltage; the mains and the coil current are the same. Star connections are denoted by the symbol **Y**.

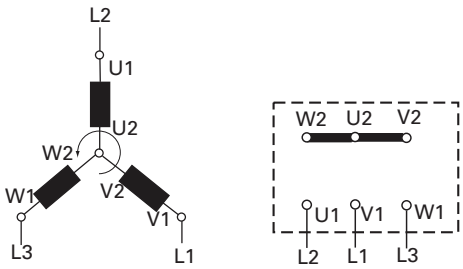

Fig. 6: Motor coil and connecting plate of Star Connection (for high voltage)

Visual inspection of the direction of rotation

➔ Check the direction of rotation of the pump after switching on for the first time:
  – To do this, switch the pump briefly ON and OFF again (for a max. of 5 seconds).

➔ Compare the direction of rotation of the motor and the motor ventilator with the directional arrow on the housing cover.
  – Looking from the motor side, the correct direction of rotation is to the right in a clockwise direction.

➔ If the direction of rotation is incorrect: Swap two of the three phase contacts at the connecting cable.

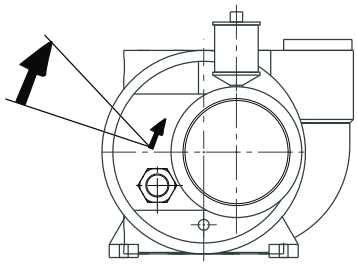

Fig. 7: Checking the direction of rotation

Motor protection

Pump motors equipped with PTC temperature sensors (3PTC) in the stator windings can be connected to a PTC resistor tripping device for protection against overload. Other approved motor temperature monitoring can be used also by the operator.

Tripping devices store the shutdown event and need to be manually switched back on again via the integrated RESET button or via the external RESET S3. Mains-ON is detected as an automatic RESET.

➔ Set up the connections so that the directional rotation indicated on the pump is maintained, regardless of the representations in the current flow diagram.

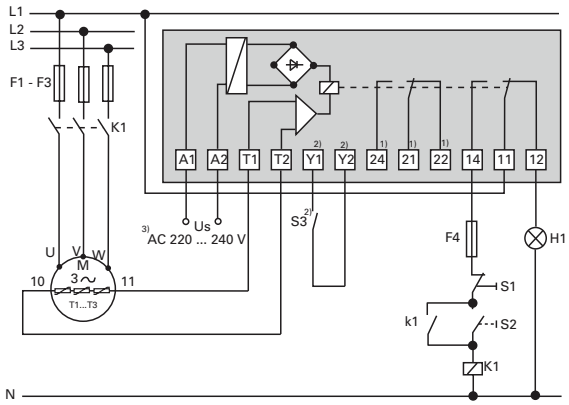

U_S Control voltage
S_1 OFF button
S_2 ON button
S_3 RESET button, external
K1 Contactor
F1 ... F4 Fuses
T1... T3 PTC resistor sensor
H1 Tripping indicator
M Motor, 3-phase

1) Only for devices with two relay outputs
2) Only for MSR type
3) Only for order no.: P 4768 051 FQ

Fig. 8: Connection example for a three-phase AC motor with PTC resistor tripping device

5.6 Connecting accessories

The following accessories are not included in the delivery, and can be ordered separately:

Sealing gas connection

The evacuation of high-boiling media (e.g. solvents) can be damaging to the lubricant. Damage can be avoided by letting in sealing gas (process-specifically) into the shaft passageways between the operating chamber and the gear chamber.

➔ The sealing gas line should be connected at both connections of each bearing bracket (4 x G 3/8").

➔ Connect gas cylinder 325 with pressure reducer 324 to flow meter 315, adjust amount of sealing gas *(siehe S. 21, Kap. 6.2)*.

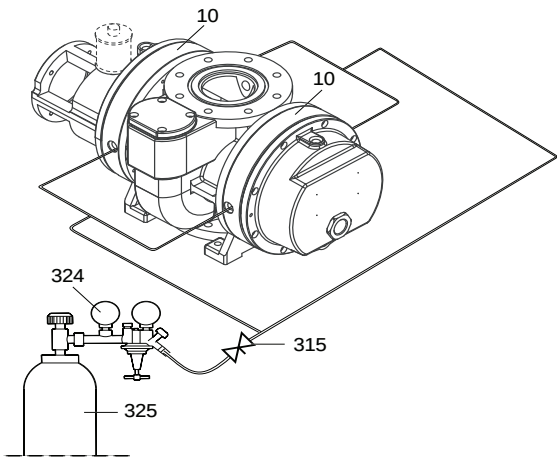

10 Bearing bracket
315 Flow meter with dosing valve
324 Pressure reducer
325 Gas cylinder

Fig. 9: Connecting sealing gas

Using a flushing device

Depending on requirements, the Roots pump can be flushed continuously or temporarily*(siehe S. 21, Kap. 6.2)*, if the evacuated medium is causing severe contamination or deposits in the suction chamber. The injection nozzle is set to the maximum fluid quantity of the pump at a pressure of 3 bar.

NOTICE

Risk of damage to the pump!

During the flushing and cleaning procedure the flushing liquid and the process medium can pass over into the bearings and oil chambers and can stick there.

➔ To protect the bearings during cleaning sealing gas must always be used.

➔ Attach flushing adapter to the vacuum flange.

➔ For sealing and throughflow monitoring install a shut-off valve and a flow meter with dosing valve into the inflowing line.

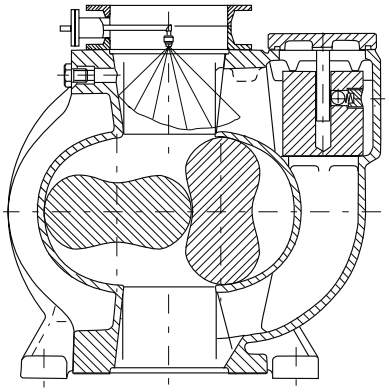

Fig. 10: Installing a flushing device

Installing a protective strainer

If there is a risk that solid particles will be carried along in the evacuation process then a protective strainer should be installed in the intake connection piece to protect the Roots pump (see accessories).

Attaching gear chamber extraction

When the vacuum chamber is evacuated quickly (<1 min), each of the gear chambers should be pumped out via an oil separator in the connection line to the fore-vacuum side. Do this as follows:

➔ Unscrew both lubricant filler screws (G 3/4") and the blanking plug from the pressure-side measurement connection (G 3/8"); check the O-rings.

➔ Instead of the filler screws, screw in screw couplings with e.g. small screw-in flanges (DN 10 KF); use O-rings.

➔ Flange on both oil separators and install the lines.

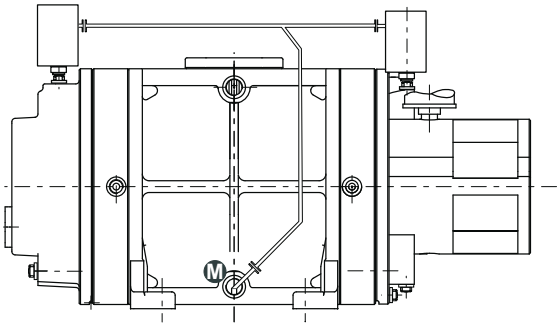

Fig. 11: Gear chamber extraction

Heating connection

The bearing brackets can be tempered in order to prevent condensation or heat dissipation. If a heating connection is provided (factory retrofitting is possible) for both caps heating coils, one each, are inserted inside and bolted from the outside. The ports in the caps (two each) are equipped with threaded nipple with 1/4 " female thread.

Assembly

➔ Remove plugs 128 and 129 from threaded hole G 1/4“.
➔ Bridge both connections 128 on one side of the Roots pump.
➔ Connect either the supply and return pipe of the heater to 129.

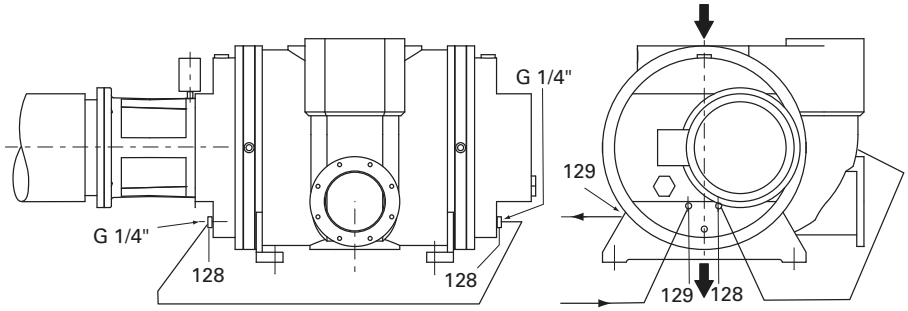

Fig. 12: Heating connection

128/129 Threaded plugs

6 Operation

6.1 Before switching on the pump

➔ Check lubricant levels at both sightglasses and at the oiler as well.

➔ Operate shut-off units in the exhaust line in such a way that they open before or at the same time as starting the pump.

➔ Protect the pump sufficiently from taking in contaminants by means of suitable precautions (e.g. protective strainer); if necessary, check lubricant regularly or replace at shorter intervals.

6.2 Switching on the pump

➔ Switch on the Roots pump at the same time as the backing pump or after the backing pump;
– switch off Roots pump in the event of failure of the backing pump.

The overflow valve is open at the beginning of evacuation in the high pressure range. It protects the Roots pump from thermal overload. The overflow valve closes starting at a differential pressure below 25/20 mbar between the suction side and the compression side.

CAUTION

Hot surface!

Danger of burns if hot parts are touched. Depending on the operating and ambient conditions, the surface temperature of the pump may rise above 100 °C.

➔ In this case, use suitable finger guards.

Adjusting the amount of sealing gas

Depending on the operating pressure, the empirical value for the supplied sealing gas amount is between 1% (for a high operating pressure) and 8% (for a lower operating pressure) of the effective suction capacity. The set quantity of sealing gas influences the effective suction capacity and the achievable final pressure.

➔ Open gas cylinder 325.

➔ Set a maximum pressure of 2.5 bar at pressure reducer 324.

➔ At dosing valve 315, adjust the desired quantity of sealing gas on the flow meter.

Equation for calculating the sealing gas throughflow

$$Q_S = \frac{S_{th} \cdot p \cdot A_S}{p_0}$$

Q_S=Sealing gas flow under standard conditions [Nm^3/h]

p = Intake pressure [hPa]

p_0=Ambient pressure under standard conditions [hPa]

Δp=Pressure differential at the overflow valve [hPa]

p_V=Fore-vacuum pressure [hPa]

A_S=Proportion of sealing gas in the operating gas flow ($0.01 \leq A_S \leq 0.08$)

S_{th}=Rated suction capacity of the Roots pump [m^3/h]

Example for Okta 4000 A/AD with 50 hPa intake pressure and 8% sealing gas quantity:

$$Q_S = \frac{4860 \cdot 50 \cdot 0{,}08}{1013} =$$

$$Q_S = 19{,}2\ Nm^3/h$$

This applies to exhaust pressures > 100 hPa:

$$Q_S = \frac{S_{th} \cdot (p_V - \Delta p) \cdot A_S}{p_0}$$

NOTICE

High pressure in the sealing gas line when the pump is switched off!
Risk of damage to the pump seals.
➔ Lower sealing gas pressure to < 120 kPa or stop sealing gas feed immediately.

Adjusting the flushing fluid quantity

➔ Set max. flushing quantity in acc. with the following table; use flow meter.
– On pumping stations without an intermediate condenser or collecting containers the quantity of fluid should be selected according to the smallest pump in the pumping station:

Pump type	max. flushing quantity
Okta 18000/25000	3 l/min
Okta 8000/12000	2 l/min
Okta 6000 A/AD/AM/ADM	1.75 l/min
Okta 4000 A/AD/AM/ADM/ADx	1.5 l/min
Okta 2000 A/AD/AM/ADM/ADx	1.0 l/min
Okta 1000 A/AD/AM/ADM/ADx	0.5 l/min
Okta 250/500 A/AD/AM/ADM/ADx	0.25 l/min

NOTICE

High pressures are generated in the working chamber of the pump!
Exceeding the specified flushing quantities can lead to destruction of the pump.
➔ Do not exceed the indicated flushing quantity at 3 bar in the indicated time period.
➔ Drain the fluid again.
➔ Always check the vapour compatibility of the downstream pumps.

➔ Make sure that the pump is allowed to dry sufficiently inside after the flushing process.

6.3 Switching off and venting

In the case of clean processes that convey pure gases, the pump can be switched off in every pressure range and directly after the process end. When the evacuated medium in the suction chamber causes strong contamination or deposits, the vacuum pump should be flushed with air or nitrogen after the process end.

If venting of the vacuum chamber is not required, then the intake port valve must be closed before switching off the pump in order to prevent venting of the vacuum chamber.

WARNING

Exposed, rotating rotors!
Danger of crushing! The rotors will continue to run under vacuum after the motor has been switched off.
➔ Never disconnect any pipe connections at the vacuum flange or fore-vacuum flange or any sealing gas lines while the pump is running.

NOTICE

High pressure in the sealing gas line when the pump is switched off!
Risk of damage to the pump seals.
➔ Lower sealing gas pressure to < 120 kPa or stop sealing gas feed immediately.

Flush pump with flushing gas

➔ Close shut-off valve in the intake line and separate the pump from the process.
➔ Open flushing gas feed at the intake flange.
➔ Pump is operated for an additional 20 to 40 minutes while flushing gas is suctioned in.
➔ Close sealing gas valve.
➔ Switch off the pump.
➔ Venting should be performed via the suction side, do not ventilate vacuum chambers through the pump.
➔ Stop flushing gas feed.

Switching back on

After switching off the pump it can be switched back on again within 5 minutes. If you wait any longer then leave the pump to cool to ambient temperature before switching back on again.

NOTICE

Roots pump damage due to the rotors starting up!

Differences in the rate of cooling of the pump housing and rotors can cause damage to the pump.

➔ If the pump / pumping station is switched off and at a standstill for > 5 minutes, then only switch it on again after ventilation and a waiting period of at least 120 minutes to allow a balanced temperature of rotors and housing.

7 Maintenance

7.1 Precautions

WARNING

Exposed, rotating rolling pistons!

Fingers and hands can become crushed when the intake flange is open.

➔ Keep all body parts out of operating range of the rolling pistons.

➔ Use a wooden handle to rotate the rolling pistons during cleaning.

WARNING

Pump parts may be contaminated from pumped media!

Danger of poisoning due to contact with harmful substances.

➔ Decontaminate the pump before carrying out any maintenance work.

➔ In the event of contamination, take suitable safety precautions to prevent your health from being harmed by any dangerous substances.

➔ Turn off the vacuum pump, vent to atmospheric pressure and allow to cool, if necessary.

➔ Disconnect the drive motor from the mains and secure it so that it cannot be switched on.

➔ Remove the vacuum pump from the system, if necessary.

➔ Only dismantle the pump as far as necessary in order to repair defects.

➔ Dispose of used operating fluid in compliance with local regulations.

➔ When using synthetic operating fluids or working with toxic substances or substances contaminated with corrosive gases, the relevant instructions governing their use must be observed.

➔ Use only alcohol or similar agents for cleaning pump parts.

Checklist for inspection, maintenance and overhaul

Certain repair and overhaul work should only be performed by Pfeiffer Vacuum Service (PV). Pfeiffer Vacuum will be released from all warranty and liability claims if the required intervals for inspection, maintenance, or overhaul are exceeded or inspection, maintenance, repair or overhaul procedures are not performed properly. This also applies if replacement parts other than Pfeiffer Vacuum OEM replacement parts are used.

Activity	daily	as required; at least annually	as required; at least every 3 years
Check lubricant levels and colour of gear oil	X		
Check lubricant levels of sealing oil	X		
Visual inspection (leak-tightness/oil leaks)	X		
Check for noises (smoothness of operation and overflow valve)	X		
Change lubricants and sealing oil*		X	
Cleaning and checking of the overflow valve		X	
Replace O-rings on lubricant filler screws and drain screws			X
Clean suction chambers			X
Replacement of coupling buffer (toothed ring) at pumps with crown gear coupling			X
Clean gear chambers and replacing the cover gaskets			X (PV)
Replacement of piston bearings; 4 piston bearings; ball bearing/roller bearing			X (PV)
Replacement of all wearing parts such as radial shaft seals, protective bushing and all gaskets (including between the housing and bearing bracket)			X (PV)
Overhaul of the overflow valve			X (PV)
Depending on the process, the required replacement intervals for lubricants and the intervals for inspection, maintenance and overhaul may be shorter than the guide values specified in the table. Consult with Pfeiffer Vacuum Service, if necessary.			

NOTICE

Service work should be carried out by qualified personal only!

Pfeiffer Vacuum is not liable for any damage to the pump resulting from work carried out improperly.

➔ Take advantage of our service training programs; additional information at www.pfeiffer-vacuum.com.

➔ Please state all the information on the pump rating plate when ordering spare parts.

7.2 Changing the lubricant

WARNING

Hot operating fluid!

Danger of burns when draining due to contact with skin.

➔ Wear suitable protective clothing.
➔ Use a suitable collecting vessel.

Depending on the applications, Pfeiffer Vacuum recommends determining the exact service life of the operating fluid during the first year of operation.

The replacement interval may vary from the guide value specified by Pfeiffer Vacuum depending on the thermal and chemical loads, and the accumulation of suspended particles and condensation in the operating fluid.

Gear chamber

The intervals for replacing lubricant in the gear and bearing chambers are heavily dependent upon the operating conditions.

➔ Change the lubricant at least once every year.
➔ Turn off the vacuum pump, vent to atmospheric pressure and allow to cool, if necessary.
➔ Unscrew lubricant filler screws 122.
➔ Unscrew the lubricant drain screws 123 and drain the lubricant; pay attention to the O-rings!

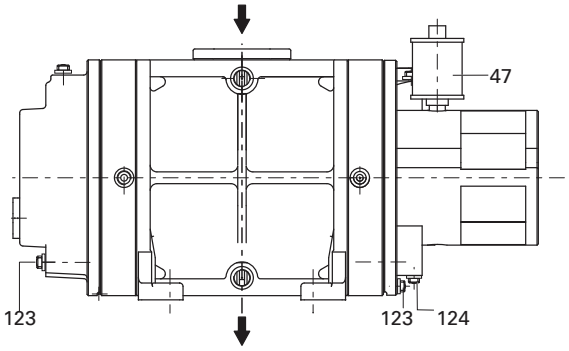

Fig. 13: Drain the lubricant

WARNING

Operating fluid may contain toxic substances from the pumped media!

Danger of poisoning from the emission of harmful substances from the operating fluid.

➔ Wear suitable protective clothing and respirators.
➔ Dispose of operating fluid according to the local regulations

➔ Screw in lubricant drain screws 123; pay attention to the O-rings.
➔ Fill with new lubricant and check fill level.
➔ Screw in lubricant filler screws 122.

Request safety data sheets for operating fluids and lubricants

from Pfeiffer Vacuum or download them from the Internet.

➔ Dispose of operating fluid according to the local regulations.

Change sealing oil (only for version with RSSR)

It is recommended that the sealing oil should be changed on an annual basis.

➔ Unscrew lubricant drain screw 124 for the sealing oil chamber at lantern 18; check the O-rings.

➔ Allow the lubricant to drain off.

➔ Screw in lubricant drain screw 124 with O-ring.

➔ Fill oiler 47 to halfway with new lubricant (sealing oil).

Falling oil level in the oiler and an oil leak below the lamp indicates a defective **external** radial shaft seal ring. In this case, the pump can continue to operate for a certain time provided the oil loss from the oiler is equalised.

Conversely, an increasing oil level without visible loss below the pump indicates a worn **internal** radial shaft seal ring. All three sealing rings should be replaced immediately as it will cause the oil in the bearing chamber to rise above the permitted level.

7.3 Cleaning the suction chamber

WARNING

Exposed, rotating rolling pistons!

Fingers and hands can become crushed when the intake flange is open.

➔ Keep all body parts out of operating range of the rolling pistons.

➔ Use a wooden handle to rotate the rolling pistons during cleaning.

NOTICE

Risk of damage to the pump!

During the flushing and cleaning procedure the flushing liquid and the process medium can pass over into the bearings and oil chambers and can stick there.

➔ To protect the bearings during cleaning sealing gas must always be used.

➔ Disconnect the drive motor from the mains and secure it so that it cannot be switched on.

➔ Dismantle the vacuum line and the fore-vacuum line of the pump.

➔ Dismantle the overflow valve *(siehe S. 28, Kap. 7.4)*.

➔ Clean the suction chamber and overflow channel using suitable brushes and cleaning agents.

➔ After cleaning, remove remaining fluids using absorbent materials and dry the working chamber.

➔ Reassemble the overflow valve and pipework after cleaning.

➔ Remove the means by which the motor was secured against being switched on.

➔ The lubricant should also be replaced *(siehe S. 26, Kap. 7.2)* after every suction chamber cleaning.

7.4 Cleaning the overflow valve

➔ Turn off the vacuum pump, vent to atmospheric pressure and allow to cool, if necessary.

➔ Undo screws 111 and remove valve cover 23, observe O-ring 73.

➔ Remove valve plate 33 from the overflow channel and dismantle it.

➔ Clean guide pins of valve cover 23, dry them and sand them lightly using emery cloth (180 grain); if necessary replace completely if severe grooves are present.

– Never oil the guide pin, that has an adverse effect on damping.

➔ Clean all other parts, inspect for wear and exchange if necessary.

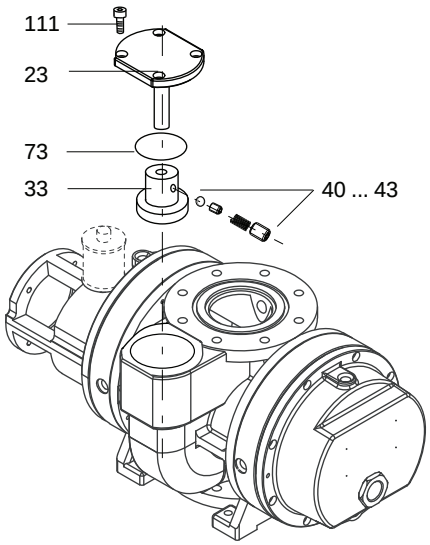

23	Valve cover
33	Valve plate
40	Pressure screw
41	Compression spring
42	Compression piece
43	Ball
73	O-ring
111	Screws (4x)

Fig. 14: Cleaning the overflow valve

7.5 Assembling the motor and coupling

WARNING

Exposed, rotating coupling!

Items of clothing could be trapped and wound up.

➔ When mounting the motor, always ensure a correct seating of the coupling protection.
➔ Wear close-fitting clothing.

Crown gear coupling

When performing installation work on the coupling, it is important to observe the installation instructions of the coupling manufacturer:

www.ktr.com/en/index/service/878_mountinginstruction.htm

➔ The shaft of the drive motor must be aligned with the pump shaft:
- Observe the permissible angular and radial displacements.
- Maintain clearance E so that the crown gear can still move axially.

➔ Tighten the screws in the coupling half with the prescribed torque and secure the stud bolt with Loctite 222.

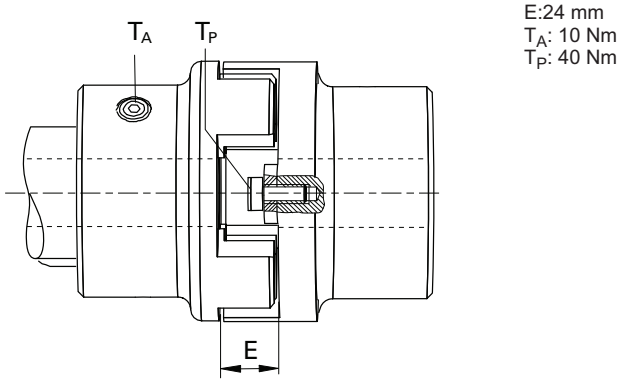

Fig. 15: Assembling the crown gear coupling at pump with standard coupling

Magnetic coupling

The following safety instructions are only valid for the **disassembly** of the drive system for pumps with a **magnetic coupling**!

➔ Before working on the motor, it is essential to read and observe the Supplementary Information PW 0142 BN.

DANGER

Strong magnetic field in the vicinity of the drive system!

Danger to life for persons with cardiac pacemakers when the drive system is disassembled.

➔ Persons with cardiac pacemakers must not enter the area (≤ 2m) of the magnetic field.
➔ Rooms in which open couplings are accessible must be identified: ” No trespassing for persons with heart pacemaker”!
➔ Disassembled magnetic couplings must be kept away from computers, data storage media and other electronic components.

NOTICE

Danger of bursting when the motor is removed!

The separating can of the magnetic coupling is made of ceramics, and can be destroyed when the motor is pulled off.

➔ When removing the motor, suspend it by the eyebolt and pull it off horizontally.
➔ Use jack screws and guide pins.

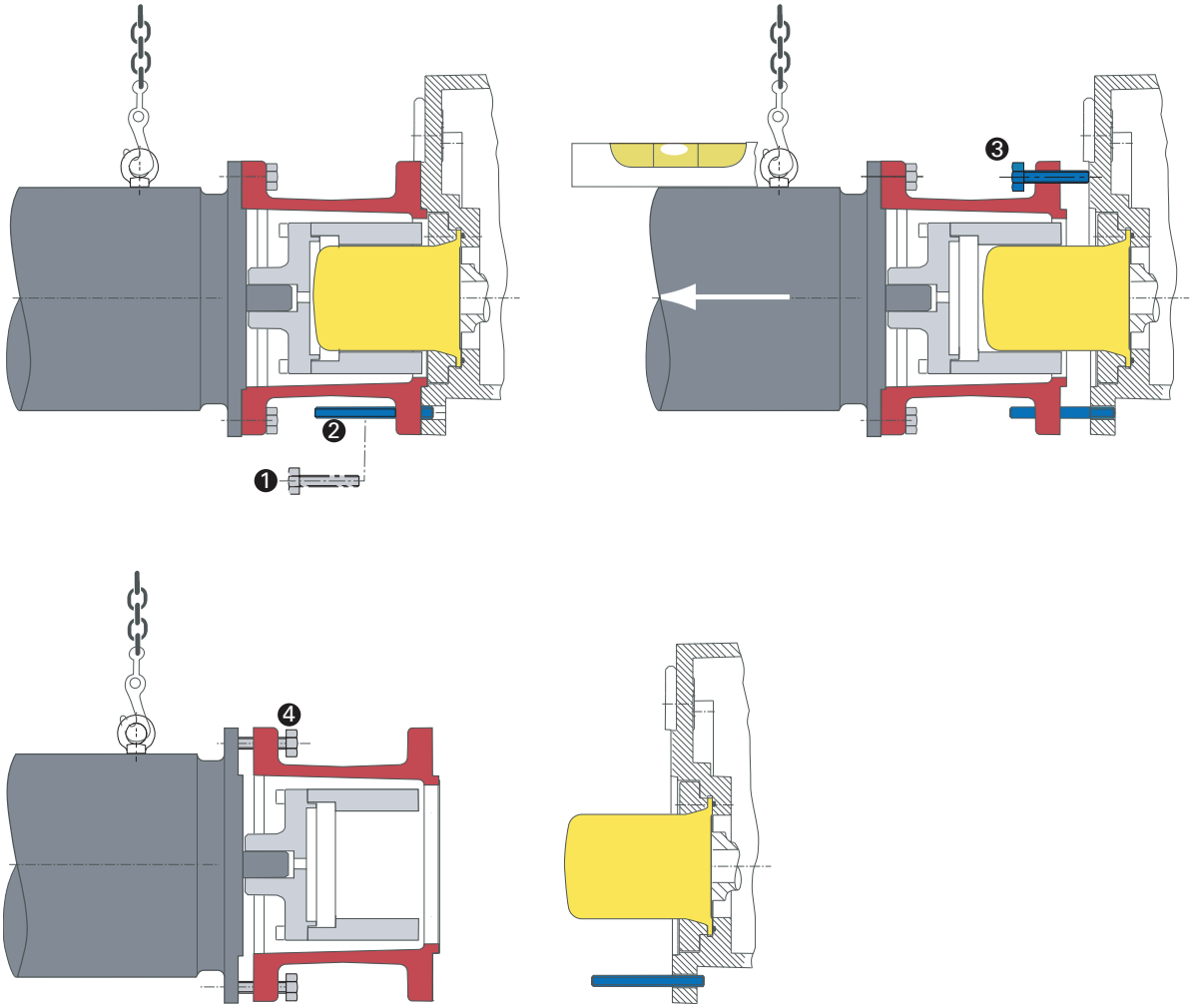

Fig. 16: Removing the motor – pump with magnetic coupling

8 Decommissioning

8.1 Shutting down for longer periods

Follow the following procedure before shutting down the pump for a longer period of time:

➔ Switch off the pump.
➔ Clean and slightly lubricant suction chamber and overflow valve.
➔ Change lubricant.
➔ Close off the vacuum and fore-vacuum flange.
➔ Evacuate the suction chamber to p<1 hPa via the suction-side measuring connection at room temperature and fill the chamber with nitrogen.
➔ Store the pump only indoors, preferably at temperatures between -10 °C and +40 °C.
  – In rooms with moist or aggressive atmospheres, the pump must be airproof shrink-wrapped in a plastic bag together with a bag of desiccant.
  – After storage periods longer than two years, it is recommended to carry out maintenance and change the lubricant before using the pump.
➔ Do not store pump in the vicinity of machines, lanes, etc., because strong vibrations can damage the rotor bearings.

8.2 Re-starting

Visually inspect the inner of the pump before taking it into operation. If there is evidence of rust on the parts of the pump which form the housing then do not take it into operation and contact Pfeiffer Vacuum Service.

Depending on how long the pump is taken out of operation, it may be necessary to replace the elastomer parts. In accordance with DIN 7716 and the manufacturer's specifications we recommend replacing the installed elastomer parts after 2 years.

NOTICE

Re-starting

The serviceability of the lubricant without operation is a maximum of 2 years. Before re-starting after a shut-down of **2 years or longer**, carry out the following work.

➔ Replace the lubricant.
➔ Replace bearings.
➔ Follow the maintenance instructions and inform Pfeiffer Vacuum.

➔ If drying pearls were inserted then they should be removed now.

8.3 Disposal

Products or parts thereof (mechanical and electrical components, operating fluids, etc.) may cause environmental burden.

➔ Safely dispose of the materials according to the locally applicable regulations.

9 Malfunctions

Please note the following instructions should the pump malfunction:

DANGER

Strong magnetic field in the vicinity of the drive system!

Danger to life for persons with cardiac pacemakers when the drive system is disassembled.

➔ Persons with cardiac pacemakers must not enter the area (≤ 2m) of the magnetic field.

➔ Rooms in which open couplings are accessible must be identified: ” No trespassing for persons with heart pacemaker”!

➔ Disassembled magnetic couplings must be kept away from computers, data storage media and other electronic components.

CAUTION

Hot surface!

Danger of burns if hot parts are touched. The surface temperature of the pump may rise above 105 °C in case of malfunction.

➔ Carry out work on the pump only after it has cooled to a safe temperature.

9.1 Rectifying malfunctions

Problem	Possible causes	Remedy
Pump does not start	No mains voltage or voltage does not correspond to the motor data	Check mains voltage and mains fuse protection; check motor switch
	Thermal protection switch has responded	Identify cause and delete; let pump cool off if necessary
	Suction chamber dirty	Clean suction chamber. Contact Pfeiffer Vacuum Service if necessary
	Gear wheels damaged	Switch off pump directly! Contact Pfeiffer Vacuum Service if necessary
	Bearing damaged	Replace bearings; contact Pfeiffer Vacuum Service if necessary.
	Motor defective	Replace motor
Pump switches off after a while after being started	Thermal protection switch of the motor has responded	Identify cause of overheating and delete; allow motor to cool off if necessary
Pump does not attain final pressure	Suction chamber dirty	Clean suction chamber.
	Lubricant dirty	Change lubricant
	Backing pump faulty	Check backing pump
	Leak in system	Repair leak
	Dirty or damaged overflow valve	Clean and check overflow valve; contact Pfeiffer Vacuum Service if necessary
	Operational loss of lubricant at the oiler	Check and replace radial shaft seals; contact Pfeiffer Vacuum Service if necessary

Problem	Possible causes	Remedy
Unusual operating noises	Pump dirty	Switch off pump directly and clean suction chamber
	Bearings or gear cogs damaged	Switch off pump directly! Contact Pfeiffer Vacuum Service if necessary
	Dirty overflow valve	Clean and check overflow valve; contact Pfeiffer Vacuum Service if necessary
	Motor bearing defective	Switch off motor directly! Replace motor; contact Pfeiffer Vacuum Service if necessary
	Motor runs - pump doesn't:only valid for pumps with magnetic coupling system (AM/ADM series)	Magnetic coupling system defective or magnetic field "broken away", contact Pfeiffer Vacuum Service if necessary. **Attention! Magnetic field**: If the magnetic field has "broken away", the orientation of the magnets with respect to each other can only be re-established at standstill. If the pump is left to operate with a "broken away" magnetic field, demagnetisation will take place and the coupling is destroyed.

NOTICE

Service work should be carried out by qualified personal only!

Pfeiffer Vacuum is not liable for any damage to the pump resulting from work carried out improperly.

➔ Take advantage of our service training programs; additional information at www.pfeiffer-vacuum.com.

➔ Please state all the information on the pump rating plate when ordering spare parts.

10 Service

Pfeiffer Vacuum offers first-class service!

- Maintenance/repairs on site by Pfeiffer Vacuum field service
- Maintenance/repairs in a nearby service center or service point
- Fast replacement with exchange products in mint condition
- Advice on the most cost-efficient and quickest solution

Detailed information and addresses at: **www.pfeiffer-vacuum.com (Service)**.

Maintenance and repairs in Pfeiffer Vacuum ServiceCenter

The following steps are necessary to ensure a fast, smooth servicing process:

➔ Download the forms "Service Request" and "Declaration on Contamination".[1)]

➔ Fill out the "Service Request" form and send it by fax or e-mail to your Pfeiffer Vacuum service address.

➔ Include the confirmation on the service request from Pfeiffer Vacuum with your shipment.

➔ Fill in the contamination declaration and enclose it in the shipment (required!).

➔ Dismantle all accessories.

➔ Drain operating fluid/lubricant.

➔ Drain cooling medium, if used.

➔ Send the pump or unit in its original packaging if possible.

Sending of contaminated pumps or devices

No units will be accepted if they are contaminated with micro-biological, explosive or radioactive substances. “Hazardous substances” are substances and compounds in accordance with the hazardous goods directive (current version). If pumps are contaminated or the declaration on contamination is missing, Pfeiffer Vacuum performs decontamination at the shipper's expense.

➔ Neutralise the pump by flushing it with nitrogen or dry air.

➔ Close all openings airtight.

➔ Seal the pump or unit in suitable protective film.

➔ Return the pump/unit only in a suitable and sturdy transport container and send it in while following applicable transport conditions.

Service orders

All service orders are carried out exclusively according to our repair conditions for vacuum units and components.

1) Forms under www.pfeiffer-vacuum.com

11 Spare parts

11.1 Spare parts packages

The spare parts packages listed here are only applicable for standard models.

Please state all information on the rating plate when ordering spare parts. Other spare parts than those described in this manual must not be used without the agreement of Pfeiffer Vacuum.

Model No.:	Pump type	Set of seals	Maintenance kit
PP W71 000 ... 020	Okta 4000 A	PP E20 008 -T	PP E21 006 -T
PP W71 700 ... 720	Okta 4000 AD	PP E20 004 -T	PP E21 006 -T
PP W72 000 ... 020	Okta 4000 AM	PP E20 025 -T	PP E21 005 -T
PP W72 100 ... 120	Okta 4000 AM	PP E20 025 -T	PP E21 005 -T
PP W72 600 ... 620	Okta 4000 ADM	PP E20 026 -T	PP E21 005 -T
PP W72 700 ... 020	Okta 4000 ADM	PP E20 026 -T	PP E21 005 -T
PP W76 000 ... 020	Okta 6000 A	PP E20 016 -T	PP E21 006 -T
PP W76 700 ... 720	Okta 6000 AD	PP E20 015 -T	PP E21 006 -T
PP W77 000 ... 019	Okta 6000 AM	PP E20 025 -T	PP E21 005 -T
PP W77 100 ... 120	Okta 6000 AM	PP E20 025 -T	PP E21 005 -T
PP W77 600 ... 620	Okta 6000 ADM	PP E20 026 -T	PP E21 005 -T
PP W77 700 ... 020	Okta 6000 ADM	PP E20 026 -T	PP E21 005 -T

Set of seals for pumps with flexible coupling and radial shaft seal ring

This set of seals includes all of the seal parts such as O-rings, radial shaft seal rings (without protective sleeve), flat seals, square washers, profile seals and supporting rings for the radial shaft sealing rings. Not included are centering rings for connecting the pumps for the suction and pressure side.

Set of seals for pumps with magnetic coupling

This set of seals includes all of the seal parts such as O-rings, flat seals, square washers and profile seals. Not included are centering rings for connecting the pumps for the suction and pressure side.

Maintenance kit for pumps with flexible coupling and radial shaft seal ring

This maintenance kit contains all of the seal parts in the area of the radial shaft seal rings. The maintenance kit also contains the sealing rings for the filling and drain screws, the buffers for the coupling and the swivel gaskets.

Maintenance kit for pumps with magnetic coupling

This maintenance kit contains the sealing rings for the filler and drain screws, the O-ring for the separating can and the two O-rings for the gear unit cover.

12 Accessories

Accessories	Size	Type	Article no.
Protective grill	DN 250 ISO	Okta 4000 A/AM Okta 6000 A/AM	PP 031 136 -X
	DN 250 PN 16	Okta 4000 AD/ADM Okta 6000 AD/ADM	PP 031 137 -X
Sealing gas connection		Okta 4000 A ... ADM	PP 031 078 -T
		Okta 6000 A ... ADM	PP 031 336 -T
Flushing unit		Okta 4000 A ... ADM	PP 031 144 -T
		Okta 6000 A ... ADM	PP 031 337 -T
Gear chamber evacuation unit		Okta 4000 A ... ADM	PP 031 077 -T
		Okta 6000 A ... ADM	PP 031 338 -T
Heating connection		on request / factory retrofitting possible	
PTC tripping unit		230 V/AC	P 4768 051 FQ

Further detailed accessories are contained in the Pfeiffer Vacuum printed or Online Catalogue.

12.1 Documentation for accessories

Depending on the pump version, supplementary information may be required for safe use of accessories:

	Accessories	No. of supplementary information*
	Special overflow valves ● with modified pressure differential at the overflow valve ● buffered version for short-time evacuation ● blocked version	PW 0022 BN
	Level switch for monitoring the fill level of lubricants in both oil chambers; including pressure equalisation line	PK 0222 BN
	Supplementary information for motor exchange at Roots pumps with magnetic coupling	PW 0142 BN

* these documents can be downloaded from the Internet

13 Technical data

Okta 4000 A/AD

Parameter	Okta 4000 A	Okta 4000 AD
Flange (in)	DN 250 ISO-F	DN 250 DIN PN 16
Flange (out)	DN 160 ISO-F	DN 150 DIN PN 16
Nominal pumping speed at 50 Hz	4325 m^3/h	4325 m^3/h
Nominal pumping speed at 60 Hz	5190 m^3/h	5190 m^3/h
Differential pressure at the overflow valve	25 hPa	25 hPa
Nominal rotation speed at 50 Hz	3000 min^{-1}	3000 min^{-1}
Nominal rotation speed at 60 Hz	3600 min^{-1}	3600 min^{-1}
Leak rate	$1 \cdot 10^{-2}$ hPa l/s	$1 \cdot 10^{-2}$ hPa l/s
Emission sound pressure level (EN ISO 2151) at intake pressure 1 hPa	74 dB (A)	74 dB (A)
Emission sound pressure level (EN ISO 2151) at intake pressure 10 hPa	79 dB (A)	79 dB (A)
Ambient temperature	5-40 °C	5-40 °C
Protection category	IP 55	IP 55
Rated power 50 Hz	11 kW	11 kW
Rated power 60 Hz	13.2 kW	13.2 kW
Mains requirement: voltage 50 Hz	400/690 V	400/690 V
Mains requirement: voltage 60 Hz	460 V	460 V
Version	Standard	Pressure surge resistant
Operating fluid filling	7 l	7 l
Weight	640 kg	655 kg
Cooling method, standard	Air	Air

Okta 4000 AM/ADM

Parameter	Okta 4000 AM	Okta 4000 ADM
Flange (in)	DN 250 ISO-F	DN 250 DIN PN 16
Flange (out)	DN 160 ISO-F	DN 150 DIN PN 16
Nominal pumping speed at 50 Hz	4325 m^3/h	4325 m^3/h
Nominal pumping speed at 60 Hz	5190 m^3/h	5190 m^3/h
Differential pressure at the overflow valve	25 hPa	25 hPa
Nominal rotation speed at 50 Hz	3000 min^{-1}	3000 min^{-1}
Nominal rotation speed at 60 Hz	3600 min^{-1}	3600 min^{-1}
Leak rate	$1 \cdot 10^{-5}$ hPa l/s	$1 \cdot 10^{-5}$ hPa l/s
Emission sound pressure level (EN ISO 2151) at intake pressure 1 hPa	74 dB (A)	74 dB (A)
Emission sound pressure level (EN ISO 2151) at intake pressure 10 hPa	79 dB (A)	79 dB (A)
Ambient temperature	5-40 °C	5-40 °C
Protection category	IP 55	IP 55
Rated power 50 Hz	11 kW	11 kW
Rated power 60 Hz	13.2 kW	13.2 kW
Mains requirement: voltage 50 Hz	400/690 V	400/690 V
Mains requirement: voltage 60 Hz	460 V	460 V
Version	Hermetically sealed	Pressure surge resistant, hermetically sealed
Operating fluid filling	7 l	7 l
Weight	655 kg	655 kg
Cooling method, standard	Air	Air

Okta 6000 A/AD

Parameter	Okta 6000 A	Okta 6000 AD
Flange (in)	DN 250 ISO-F	DN 250 DIN PN 16
Flange (out)	DN 160 ISO-F	DN 150 DIN PN 16
Nominal pumping speed at 50 Hz	6490 m^3/h	6490 m^3/h
Nominal pumping speed at 60 Hz	7785 m^3/h	7785 m^3/h
Differential pressure at the overflow valve	20 hPa	20 hPa
Nominal rotation speed at 50 Hz	3000 rpm	3000 rpm
Nominal rotation speed at 60 Hz	3600 rpm	3600 rpm
Leak rate	$1 \cdot 10^{-2}$ hPa l/s	$1 \cdot 10^{-2}$ hPa l/s
Emission sound pressure level (EN ISO 2151) at intake pressure 1 hPa	74 dB (A)	74 dB (A)
Emission sound pressure level (EN ISO 2151) at intake pressure 10 hPa	79 dB (A)	79 dB (A)
Ambient temperature	5-40 °C	5-40 °C
Protection category	IP 55	IP 55
Rated power 50 Hz	15 kW	15 kW
Rated power 60 Hz	18.5 kW	18.5 kW
Mains requirement: voltage 50 Hz	400/690 V	400/690 V
Mains requirement: voltage 60 Hz	460 V	460 V
Version	Standard	Pressure surge resistant
Operating fluid filling	7 l	7 l
Weight	840 kg	787 kg
Cooling method, standard	Air	Air

Okta 6000 AM/ADM

Parameter	Okta 6000 AM	Okta 6000 ADM
Flange (in)	DN 250 ISO-F	DN 250 DIN PN 16
Flange (out)	DN 160 ISO-F	DN 150 DIN PN 16
Nominal pumping speed at 50 Hz	6490 m^3/h	6490 m^3/h
Nominal pumping speed at 60 Hz	7785 m^3/h	7785 m^3/h
Differential pressure at the overflow valve	20 hPa	20 hPa
Nominal rotation speed at 50 Hz	3000 rpm	3000 rpm
Nominal rotation speed at 60 Hz	3600 rpm	3600 rpm
Leak rate	$1 \cdot 10^{-5}$ hPa l/s	$1 \cdot 10^{-5}$ hPa l/s
Emission sound pressure level (EN ISO 2151) at intake pressure 1 hPa	74 dB (A)	74 dB (A)
Emission sound pressure level (EN ISO 2151) at intake pressure 10 hPa	79 dB (A)	79 dB (A)
Ambient temperature	5-40 °C	5-40 °C
Protection category	IP 55	IP 55
Rated power 50 Hz	15 kW	15 kW
Rated power 60 Hz	18,5 kW	18.5 kW
Mains requirement: voltage 50 Hz	400/690 V	400/690 V
Mains requirement: voltage 60 Hz	460 V	460 V
Version	Hermetically sealed	Pressure surge resistant, hermetically sealed
Operating fluid filling	7 l	7 l
Weight	875 kg	870 kg
Cooling method, standard	Air	Air

13.1 Dimensions

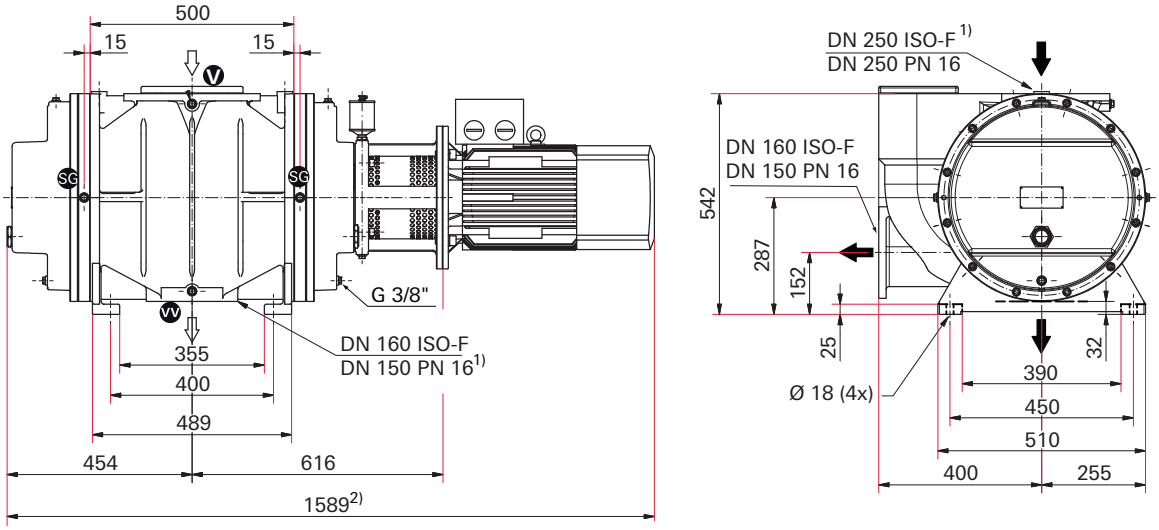

Fig. 17: Maßbild Okta 4000 A/AD

[1]gilt für AD-Version [2] abhängig vom Motortyp

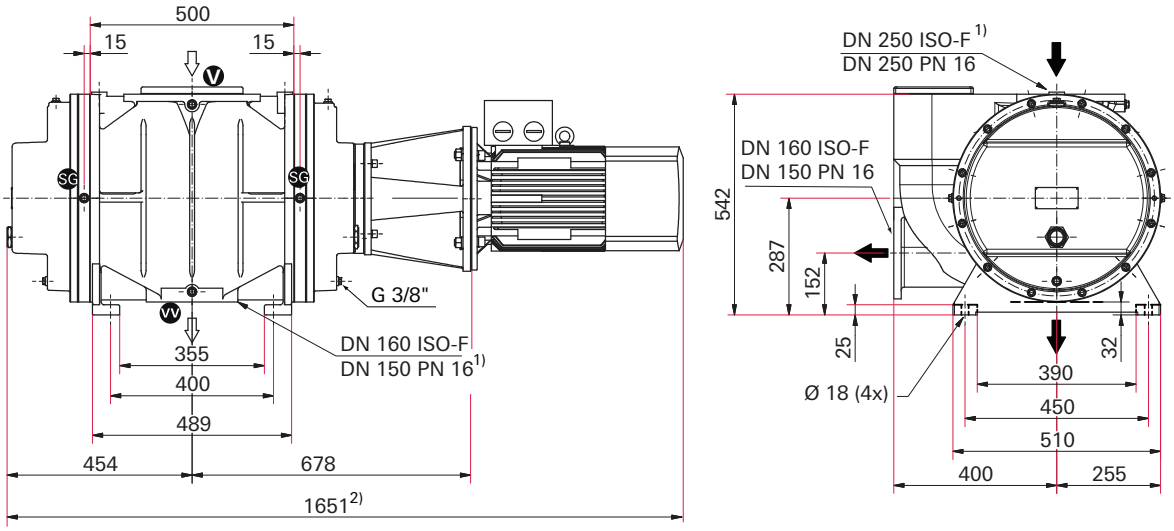

Fig. 18: Maßbild Okta 4000 AM/ADM

[1]gilt für ADM-Version [2] abhängig vom Motortyp

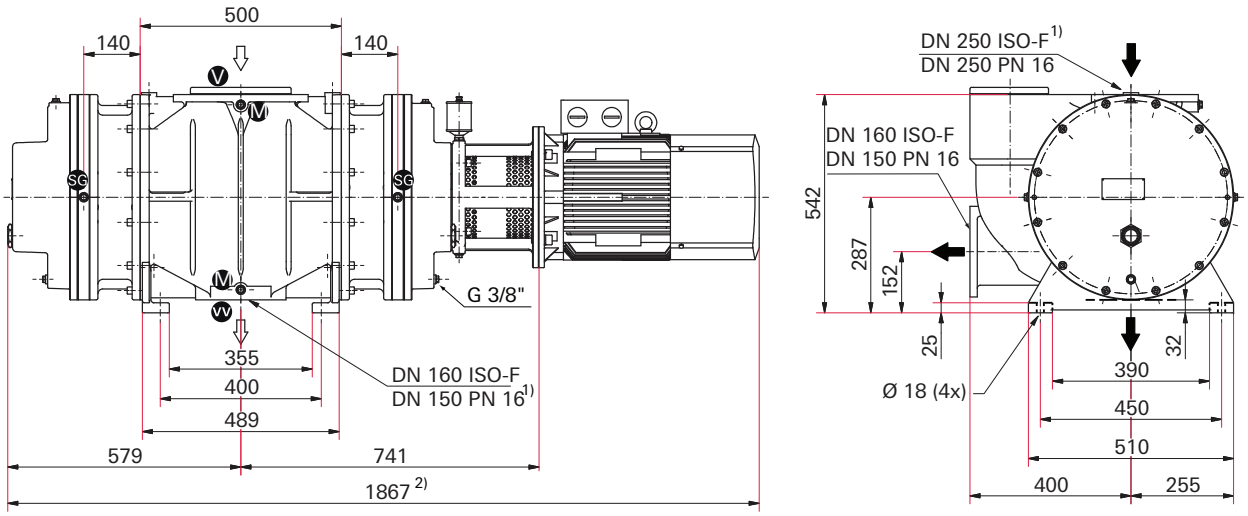

Fig. 19: Maßbild Okta 6000 A/AD

[1]gilt für AD-Version [2] abhängig vom Motortyp

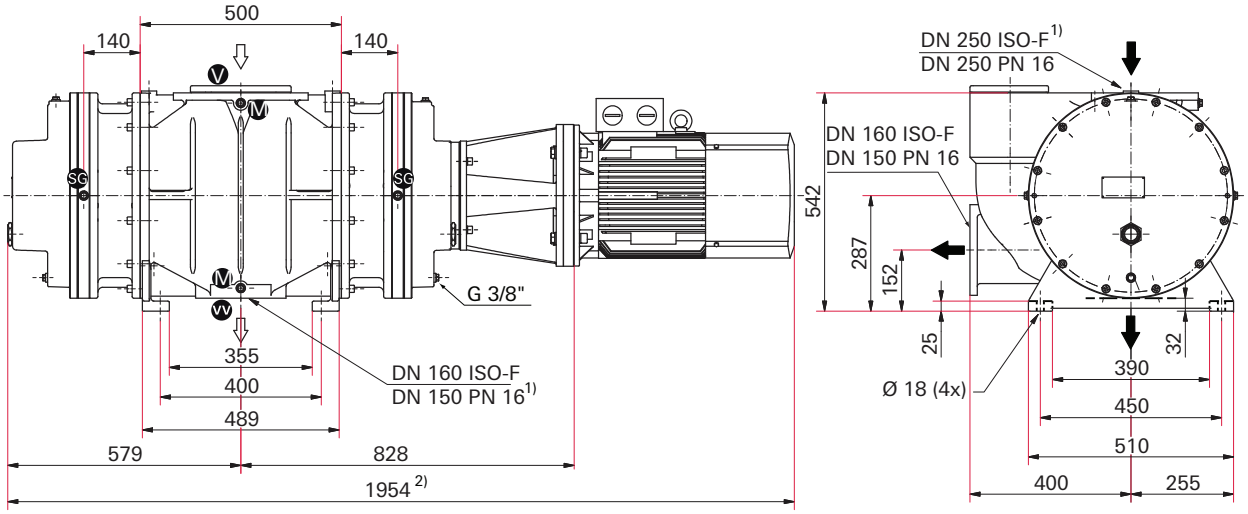

Fig. 20: Maßbild Okta 6000 AM/ADM

[1]gilt für ADM-Version [2] abhängig vom Motortyp

Declaration of conformity

according to the EC directive:

- **Machinery 2006/42/EC (Annex II, no. 1 A)**

We hereby declare that the product cited below satisfies all relevant provisions of EC directive "Machinery" **2006/42/EC**.

In addition, the product cited below satisfies all relevant provisions of EC directive "Electromagnetic Compatibility" **2004/108/EC** .

The agent responsible for compiling the technical documentation is Mr. Sebastian Oberbeck, Pfeiffer Vacuum GmbH, Berliner Straße 43, 35614 Aßlar.

Okta 4000/6000 A/AD/AM/ADM

Guidelines, harmonised standards and national standards and specifications which have been applied:

DIN EN ISO 12100 : 2011-03	DIN EN 61010 : 2002	DIN EN 61000-6-3 : 2007
DIN EN 1012-2 : 1996	DIN EN 61000-6-1 : 2007	DIN EN 61000-6-4 : 2007
DIN EN ISO 13857 : 2008	DIN EN 61000-6-2 : 2006	

Signatures:

Pfeiffer Vacuum GmbH
Berliner Straße 43
35614 Asslar
Germany

(M.Bender)
Managing Director

(Dr. M. Wiemer)
Managing Director

CE/2011

PFEIFFER VACUUM

Vacuum solutions from a single source

Pfeiffer Vacuum stands for innovative and custom vacuum solutions worldwide, technological perfection, competent advice and reliable service.

Complete range of products

From a single component to complex systems: We are the only supplier of vacuum technology that provides a complete product portfolio.

Competence in theory and practice

Benefit from our know-how and our portfolio of training opportunities! We can support you with your plant layout and provide first-class on-site-service worldwide.

Are you looking for a perfect vacuum solution? Please contact us

Pfeiffer Vacuum GmbH
Headquarters • Germany
T +49 6441 802-0
info@pfeiffer-vacuum.de
www.pfeiffer-vacuum.com